Technical FAQ

NetApp MetroCluster

ONTAP 8.3.x and ONTAP 9.0, 9.1, 9.2, 9.3

Nabil Fares, NetApp
Version 3.8.4
January 2018

Abstract

This document provides answers to frequently asked questions about NetApp® MetroCluster™ software in the NetApp ONTAP® 8.3.x and ONTAP 9 operating system.

Data Classification

NetApp Confidential - Limited Use

MetroCluster FAQ Engine

Table of Content

MetroCluster 9
What was released for MetroCluster in Data ONTAP 8.3.0? 10
What was released for MetroCluster in Data ONTAP 8.3.1? 11
What was released for MetroCluster in Data ONTAP 8.3.2? 12
What was released for MetroCluster in ONTAP 9.0? 13
What was released for MetroCluster in ONTAP 9.1? 14
What was released for MetroCluster in ONTAP 9.2? 15
MCC References 16
What was released for MetroCluster in ONTAP 9.3? 17
MetroCluster FC 17
Overview 17
Does the Data ONTAP 8.3.0 or ONTAP 9.0, 9.1,9.2 release affect 7-Mode stretch MetroCluster or fabric MetroCluster? 18
Is MetroCluster a chargeable feature or a separate product? 19
Which licenses are required for MetroCluster? 20
What are the key benefits of MetroCluster over SMC and FMC? 21
Are all clustered Data ONTAP features supported in MetroCluster? 22
How does MetroCluster 8.3.x compare with SMC and FMC? 23
What are the maximum distances for stretch MetroCluster configurations? 25
Requirements 26
What are the basic MetroCluster configurations? 27
What are the front-end network requirements for MetroCluster? 29
Do the IMT and Config Advisor support MetroCluster on clustered Data ONTAP 8.3.x/ ONTAP 9.0? 30
Does the NetApp AutoSupport® tool provide support for MetroCluster 8.3.x? 31
How can I size a MetroCluster configuration? 32
Can the ISL be shared between the two DR groups in an eight-node MetroCluster configuration? 33
Which FAS controller models are supported? 34
What are the platform mixing rules for the 8-node MetroCluster configuration? 35
Does the 8-node MetroCluster configuration support SAN protocols? 36
Can I mix NAS and SAN in the 8-node MetroCluster configuration? 37
Are cluster interconnect switches required in each HA pair? 38
Which cluster interconnect switches are supported for an 8 or 4-node MetroCluster configuration? 39
Which back-end storage is supported in a MetroCluster configuration with array LUNs?

(NetApp Confidential - Limited Use) Nabil Fares | 01-05-2018 21:41

..... 40
If the storage is purely array LUNs, does MetroCluster support combining the front-end and back-end fabric switches? 41
Can controller types be mixed in a MetroCluster configuration? 42
Can MetroCluster nodes be mixed with nodes other than MetroCluster in the same cluster? 43
How can I verify that the correct SFP is used for the 16Gb FC-VI connection? 44
Are the port efficiency improvements for the FAS8020 controller supported on the AFF8020 controller? 45
What are the disk requirements for NetApp SyncMirror with MetroCluster? 46
Can aggregates be configured as RAID DP or RAID 4? 47
Can we do a RAID-TEC aggregate on an MCC? 48
What is the minimum number of disks that a data aggregate can contain? 49
Can the cluster contain any data before initializing MetroCluster? 50
Does MetroCluster support unmirrored aggregates? 51
Can mirrored aggregates be converted to an unmirrored aggregate? 52
Can unmirrored aggregates be converted to mirrored aggregates? 53
What is the minimum number of aggregates required in MetroCluster? 54
Why are two data aggregates on each cluster recommended to configure MetroCluster? 55
Does storage need to be added in fixed increments? 56
What are the system limits for MetroCluster? 57
Do MetroCluster configurations with array LUNs require FAS shelves for the root aggregate? 58
Does MetroCluster support advanced disk partitioning for the root aggregate? 59
Does MetroCluster support SSD advanced disk partitioning for Flash Pool? 60
Does SMC support SSD partitioning for Flash Pool? 61
Are SSD-only aggregates supported in a MetroCluster configuration without requiring a PVR? 62
Which switches are supported for the storage fabric? 63
Is there any feature or functional differences between a MetroCluster configuration using FC ISL connectivity and FCIP ISL connectivity? 64
Which switches are supported for FCIP ISL connectivity? 65
Are any additional licenses required for the Cisco 9250i/Brocade 7840 FCIP switches? 66
Can I get more information about the Cisco MDS 9250i FCIP switch? 67
Is compression supported on the Cisco MDS 9250i FCIP switch? 68
What are the steps to configure the Cisco MDS 9250i FCIP switch for MetroCluster? 69
How many ports are licensed when I purchase the Cisco MDS 9250i FCIP switch through NetApp? 70

(NetApp Confidential - Limited Use) Nabil Fares | 01-05-2018 21:41

Can I get more information about the Brocade 7840 FCIP switch? 71
Is it required to purchase the switches from NetApp? 72
Do switches ordered through NetApp include SFPs? 73
What is included with the Brocade switches that are ordered through NetApp? 74
How is licensing handled for the reuse of existing supported Brocade switches? 75
What is included with the Cisco switches that are ordered through NetApp? 76
Can MetroCluster 8.3.x share the same switches and ISLs with an FMC during a transition? 77
Is the 8Gb Brocade 6510 supported? 78
Is trunking required for Brocade switches? 79
What is the required latency for the ISLs? 80
Do all the ISLs in both fabrics have to be the same speed and length? 81
Can separate MetroCluster configurations share the same switches and ISLs? 82
What is the maximum distance that is supported between the two clusters? 83
What distances are supported using LW optics between the switch and the xWDM? 84
Is traffic isolation used? 85
Is out-of-order delivery (OOD) supported on the ISL? 86
Is ISL encryption supported? 87
Is ISL compression supported? 88
Can the FC switch be shared with all four controllers in an eight-node MetroCluster configuration? 89
Can the FC switches be non-disruptively replaced? 90
What specific considerations would be required for the FAS9000 / A700 platforms? 91
Which configurations require FibreBridges? 92
Which FibreBridges are supported? 93
Is SNMP supported for the FibreBridge? 94
Is the ATTO 6500N still supported and available for MetroCluster deployments? 95
What is the maximum number of disk shelves when using the ATTO 7500N? 96
What are the disk shelf limits in an All Flash FAS (AFF) configuration when using the ATTO 7500N? 97
What are some of the key advantages of the ATTO 7500N compared to the ATTO 6500N? 98
What is the maximum supported distance between sites in MetroCluster? 99
What is the minimum supported eight-node MetroCluster configuration? 101
What is the minimum supported four-node MetroCluster configuration? 104
What is the minimum supported two-node stretch MetroCluster configuration in Data ONTAP? 110
What is required for the two-node fabric MetroCluster configuration in clustered Data ONTAP? 112
What is required for the two-node configuration with FibreBridges? 113
What is required for the two-node configuration with optical SAS cables? 114

(NetApp Confidential - Limited Use) Nabil Fares | 01-05-2018 21:41

How many target FC ports are required when deploying AFF-series controllers in a two-node or four-node MetroCluster configuration? 115
What does the cabling and architecture look like in the four-node configuration? 116
What does the cabling and architecture look like in the eight-node configuration? 117
What two-node configurations are available in Data ONTAP 8.3.1 or later? 118
How does the MetroCluster FCIP configuration differ from the FC configuration? 121
Which are the supported configurations of the FAS controllers? 122
How many target and initiator ports are required in a MetroCluster configuration with array LUNs? 124
Which storage shelves are supported? 125
What is the recommended way to assign the IDs to the shelves? 127
How many disks and shelves are required? 128
What is the maximum spindle count for MetroCluster? 130
How are LUNs assigned in a MetroCluster configuration with storage arrays? 131
Does a MetroCluster All Flash FAS configuration require a PVR? 133
How much Flash Pool cache can be configured in a MetroCluster configuration? 134
Can I verify the FCIP ISL latency between the two MetroCluster clusters? 135
How do I create a quote for an FCIP MetroCluster deployment? 136
What are the requirements for the ISLs between switches? 139
How do I check the required Cisco and Brocade LW SFP and xWDM support? 140
What distances are supported using SW optics between the switch and the xWDM? 141
How many shelves are supported in a FibreBridge-attached stack with MetroCluster? 142
Since only two FC ports on the ATTO 7500N are used, can one ATTO 7500N be used per stack? 143
What is the factory default configuration of the disk shelves between the four SAS ports? 144
What is the factory default configuration of the ports on the ATTO 6500N and 7500N? 145
Can only one FC port be used for ATTO 6500N FibreBridge connectivity? 146
Can two FC ports be used for the ATTO 7500N FibreBridge connectivity? 147
Can I nondisruptively replace an ATTO 6500N with the ATTO 7500N? 148
What firmware version is supported on ATTO 7500N? 149
What should I be aware of when deploying the ATTO 7500N? 150
How do I configure the management port on the ATTO 7500N? 151
How do I upgrade the firmware on ATTO 7500N? 152
Is the MetroCluster stretch configuration supported with the ATTO 7500N? 153
What distances are supported using SW optics with the ATTO 7500N? 154
Can the ATTO 6500N and the ATTO 7500N coexist in the same MetroCluster disk stack? 155
Can the ATTO 6500N and the ATTO 7500N coexist in same MetroCluster configuration? 156
Is the four-port 8Gbps FC card (X1132A-EN-R6-C) supported with the ATTO 7500N? 157
What are disk shelf models supported with the ATTO 6500N and the ATTO 7500N? 158
Can disk shelves with unmirrored aggregates be connected directly to the FAS or AFF controller? 159
Which SAN OSs are supported? 160
What SAN host connectivity (front end) is required? 161
Which components are required in a MetroCluster configuration? 162
Architecture 162
MCC Replication 163

(NetApp Confidential - Limited Use) Nabil Fares | 01-05-2018 21:41

Which types of replication are used in MetroCluster? 164
Must all aggregates be mirrored in a MetroCluster configuration? 165
Should unmirrored aggregates be created from pool0? 166
Is SyncMirror supported for configurations without MetroCluster? 167
Is synchronous or semi-synchronous SnapMirror available in Data ONTAP 8.3.x? 168
What is the read and write behavior with plexes in SyncMirror (including MetroCluster)? 169
What is the switchover granularity of MetroCluster? 170
Can data on the remote plex be accessed by the DR partner during normal operation? 171
What happens if all ISLs in a fabric MetroCluster are down? 172
What happens if the links fail in a two-node stretch MetroCluster configuration? 173
How is the MetroCluster DR partner assigned in the 8-node MetroCluster configuration? 174
Does eight-node MetroCluster support mixing FAS and AFF controllers? 175
How does MetroCluster replicate data in an eight-node configuration? 176
Does MetroCluster support clustered Data ONTAP nondisruptive upgrades (NDU)? 177
Can MetroCluster switch over if the clusters are running different minor Data ONTAP versions? 178
Is aggregate relocation (ARL) for nondisruptive controller upgrade supported with MetroCluster? 179
Can a two-node configuration be converted to a four-node configuration? 180
Can a four-node configuration be converted to an eight-node configuration? 181
Can a non-MetroCluster node be converted to MetroCluster? 182
Is vol move supported with MetroCluster? 183
Is it possible to transfer data from a volume in a mirrored aggregate to an unmirrored aggregate? 184
Is vol rehost supported with MetroCluster? 185
Can I nondisruptively replace an ATTO 6500N with the ATTO 7500N? 186
Where can I find information about other maintenance operations with MetroCluster? 187
How can 7-Mode (including FMC or SMC) customers transition to MetroCluster? 188
Can FMC switches and ISLs be shared while transitioning to MetroCluster 8.3.x or 9.0? 189
Can the 7-Mode Transition Tool (7MTT) be used to transition from 7-Mode to MetroCluster 8.3.x/9.0? 190
Is there a nondisruptive transition from 7-Mode (including FMC and SMC) to MetroCluster? 191
Can 7MTT be used to transition from single-node or HA pair 7-Mode systems to MetroCluster? 192
Can 7MTT transition 32-bit data from 7-Mode controllers to MetroCluster? 193
Can equipment that was previously running 7-Mode (FMC and SMC) be reused for MetroCluster 8.3.x/9.0? 194
How can existing clustered Data ONTAP customers transition to MetroCluster? 195
Is there a nondisruptive transition from clustered Data ONTAP to MetroCluster? 196
Can 7MTT be used to transition from clustered Data ONTAP to MetroCluster? 197
Can nodes that were previously running another Data ONTAP release be reused for MetroCluster 8.3.x? 198
Configuration 198
Does System Setup support MetroCluster? 199
How can MetroCluster be monitored? 200
Is there an easy way to configure the fabric switches? 201

(NetApp Confidential - Limited Use) Nabil Fares | 01-05-2018 21:41

How many ports for ISLs and stacks are included in the switch golden configuration files? ... 202
How is MetroCluster configured at initial setup? ... 203
How is the DR partner node chosen in an eight-node and four-node configuration? ... 204
What are the default passwords for hardware shipped from the factory? ... 205
What configurations are available for two-node stretch MetroCluster? ... 206
Can non-MetroCluster nodes can co-exist within the same cluster as MetroCluster nodes? ... 207
Can a MetroCluster configuration be returned to a configuration without MetroCluster? ... 208
How are switchover and switchback initiated? ... 209
When is automatic switchover initiated in the two-node, four-node, and eight-node MetroCluster configurations? ... 210
Does Automatic switchover require a Product Variance Request (PVR)? ... 211
What is the difference between negotiated switchover and switchover on disaster? ... 212
Is it possible to perform a switchover test without actually switching over any objects? ... 213
Is it possible to perform an automatic switchover on disaster? ... 214
What happens if the cluster peering network experiences an interruption? ... 215
Does epsilon play a role in MetroCluster availability? ... 216
Interoperability ... 216
What capabilities does OCUM provide for MetroCluster? ... 217
What events related to MetroCluster cause a health monitor alert? ... 218
Does System Manager support MetroCluster? ... 219
Is Tiebreaker available for MetroCluster? ... 220
Does switchover work if the cluster is not in quorum? ... 221
How do SnapMirror and SnapVault interoperate with MetroCluster? ... 222
Is SnapLock Enterprise supported in MetroCluster? ... 223
Is SnapLock Compliance supported in MetroCluster? ... 224
Cisco ... 224
Brocades ... 224
Atto ... 224
MetroCluster IP ... 224
Requirements ... 224
Does an MCC-IP require the FCVI adapters? ... 225
What additional hardware needed for an MCC-IP cluster? ... 226
Which controllers supported with MCC-IP as of 9.3? ... 227
Which shelves are supported with MCC-IP? ... 228
Overview ... 228
What are the differences between MC-IP and MC-FC? ... 229
Does the DR switchover/switchback flow changes with MCC-IP? ... 230
Architecture ... 230
Does MCC-IP require ATTO bridges or Fibre Channel switches? ... 231
How do shelves connect to an MCC-IP controller as opposed to an MCC-FC controller? ... 232
What is the procedure for and best practice around performing switchover and switchback for MCC-IP when unmirrored aggregates are involved? ... 233
How does the MCC-IP architecture differ from MCC-FC architecture? ... 234
Where can I find the MCC-IP architecture details? ... 235
How does replication work with MCC-IP? ... 236

(NetApp Confidential - Limited Use) Nabil Fares | 01-05-2018 21:41

Does the RAID SyncMirror (RSM) behavior change with MCC-IP? ... 238
Does planned and unplanned switchover behavior change in MCC-IP? ... 239
Configuration ... 240
How does the configuration change for MCC-IP vs MCC-FC? ... 241
Interoperability ... 241
List of features not currently supported with MCC-IP in ONTAP 9.3. ... 242
What is the shelf stack size for MCC-IP with 9.3? ... 243
Cisco ... 243
What model number is used for the replication switch? ... 244
Can the customer provide their replication switch, even the same model? ... 245
What is the purpose of the replication switch? ... 246
What optics are supported by the X190001 (Nexus 3132Q-V) switch? ... 247
Can the switch be used for fabric and front-connectivity? ... 248
Can the switch be shared with non-MCC-IP clusters? ... 249
Where can I find the switch Reference Configuration Files (RCF)? ... 250
What port speeds supported on the X19001 (Nexus 3132Q-V) switch? ... 251
I want to know more about the interconnect switch and its features, where can I get the information? ... 252
What optics needed between the X190001 (3132Q-V) switch and NetApp controllers? ... 253
What optics do I need for the MCC-IP ISLs? ... 254
Does the X190001 (3132Q-V) switch support SSH for management? ... 255
Does the X190001 (3132Q-V) switch require additional licenses for MCC-IP? ... 256
Are all ports available for use on the X190001 (3132Q-V)? ... 257
What is the minimum number of MCC-IP ISL required per fabric? ... 258
Does the interconnect switch X190001 (Nexus 3131Q-V) support data encryption over the fabric? ... 259
Networking ... 259
What is the minimum supported MCC-IP ISL size/speed? ... 260
What is the maximum distance supported with MCC-IP? ... 261
What is the maximum latency supported with MCC-IP? ... 262
What is the maximum distance supported natively on the X190001 (3132Q-V) switch without xWDM hardware? ... 263
Which xWDM is supported with MCC-IP? ... 264
Is there a list of supported xWDM vendors for the X190001 (Nexus 3132Q-V)? ... 265
Is Layer3 routing required for MCC-IP between sites? ... 266
How many VLANs are needed for the MCC-IP interconnect switches? ... 267
Can the customer select the VLAN numbers for the MCC-IP interconnect switches? ... 268
How are the IP addresses selected for MCC-IP fabric? ... 269
Can the IPs assigned to MCC-IP be part of the RFC 1918 private space? ... 270
Does MCC-IP support shared infrastructure, using customer’s existing connectivity between sites? ... 271
Is xWDM 40G required for MCC-IP? ... 272
Which fabric types and connectivity are supported with MCC-IP? ... 273
What is port-channel? ... 274
Are VLANs needed? ... 275
Can the ISLs for MCC-IP deployment have different distance and latency? ... 276
FAQ Engine ... 276
How do I submit a question? ... 277
What is the purpose of the MCC FAQ Engine? ... 278

Do I need an account on the MCC portal if all I want is to browse and submit questions? 279
How do I submit a new question or provide feedback on existing questions? 280

(NetApp Confidential - Limited Use) Nabil Fares | 01-05-2018 21:41

(NetApp Confidential - Limited Use) Nabil Fares | 01-05-2018 21:41

MetroCluster

What was released for MetroCluster in Data ONTAP 8.3.0?

Data ONTAP 8.3.0 includes MetroCluster in a four-node fabric configuration. Data ONTAP 8.3.0 is a release only for clustered Data ONTAP; therefore, MetroCluster in this version also supports only clustered Data ONTAP.

Last update: 2018-01-03 18:24

(NetApp Confidential - Limited Use) Nabil Fares | 01-05-2018 21:41

MetroCluster

What was released for MetroCluster in Data ONTAP 8.3.1?

The major addition for the Data ONTAP 8.3.1 release is support of a two-node architecture (in both fabric and stretch configurations) for MetroCluster.

Last update: 2018-01-03 18:23

(NetApp Confidential - Limited Use) Nabil Fares | 01-05-2018 21:41

MetroCluster

What was released for MetroCluster in Data ONTAP 8.3.2?

The Data ONTAP 8.3.2 release includes the following features:

- Increased Fibre Channel (FC) ISL distance between the MetroCluster clusters
    - Up to 185 miles (300km) using the Brocade 6505 or 6510 switch
    - 185 miles (300km) is not supported using the Cisco FC switches
- Fibre Channel over IP (FCIP) Inter-Switch Link (ISL) connectivity between the MetroCluster clusters:
    - Uses the Cisco 9250i FCIP fabric switch
    - Supports up to 120 miles (200 kilometers) between the MetroCluster clusters
- Starting in Data ONTAP 8.3.2 GA, the ATTO 7500N FibreBridge is supported for all MetroCluster fabric configurations.
    - Supports dual-power supplies
    - Provides increased performance (compared to the ATTO 6500N)
    - 7500N is essential for configurations with SSDs due to it’s higher IOPs and lower latency.
- New functionality for shared FC-VI and FC connectivity on the same initiator card (X1132A-EN-R6-C):
    - NetApp FAS8020 and AFF8020 only
    - FCVI (RDMA on FC) and FCP (SCSI on FC) on the same card (quad port) to get around 8020 port limitations

Last update: 2018-01-03 18:23

(NetApp Confidential - Limited Use) Nabil Fares | 01-05-2018 21:41

MetroCluster

What was released for MetroCluster in ONTAP 9.0?

The ONTAP 9.0 release includes the following features:

- Support for eight-node fabric configuration
    - NAS Only
- Support for unmirrored aggregates on the MetroCluster cluster
- Upgrade from two-node to four-node MetroCluster configurations
    - Two-node fabric configuration to four-node fabric configuration only
    - Upgrading from a stretch 2-node configuration to a 4-node requires no data migration
    - Non-disruptive Four-node fabric configuration to eight-node fabric configuration only
- Automatic unplanned switchover for four-node/eight-node architectures. Automatic switchover helps reduce switchover time.
- SnapLock Enterprise support
    - SnapLock Compliance is not supported

Last update: 2018-01-03 18:24

(NetApp Confidential - Limited Use) Nabil Fares | 01-05-2018 21:41

MetroCluster

What was released for MetroCluster in ONTAP 9.1?

The ONTAP 9.1 release includes the following features:

- Support for new platforms FAS8200 (AFF: A300), FAS9000 (AFF: A700). Support for LW with these new platforms.
- Multiple ISL support between switches (with in-order delivery functionality).
- switches (with in-order delivery functionality).
- 8-Node PVRs for SAN are being approved.
- OOD (Out-of-order delivery) needed for scalability with Ciena DWDM (Brocade trunking does not interoperate with Ciena DWDM).
- VGE (Volume Granular Encryption) supported with MCC -needed for financials, particularly in the US.

Last update: 2018-01-03 18:25

(NetApp Confidential - Limited Use) Nabil Fares | 01-05-2018 21:41

MetroCluster

What was released for MetroCluster in ONTAP 9.2?

The ONTAP 9.2 release includes the following features:

- Support for 8-node SAN MCC without PVR.
- Volume Increase
    - 1000 volume/node support with 5 aggregates (Requires FPVR).
    - 500 volume/node support.
- Switch and ISL sharing between multiple MCC clusters.
- Switch firmware Non-disruptive upgrade (NDU).
- Brocade G620 switch support.
- DS224C 6x960GB and18x3.8TB SSD shelf.
- DS224C 6x960GB and18x15.3TB SSD shelf (efficiency for flash deployment).
- DS460C 60x4TB, 60x8TB, 60x10TB shelves (flexible capacity options).

Last update: 2018-01-03 18:25

(NetApp Confidential - Limited Use) Nabil Fares | 01-05-2018 21:41

MetroCluster

MCC References

- TR-4375: MetroCluster for clustered Data ONTAP
- MetroCluster for clustered Data ONTAP SE Technical Presentation
- OnCommand Unified Manager
- TR-3838: Storage Subsystem Configuration Guide
- Hardware Universe
- Clustered Data ONTAP Maximum Configuration Guide – MetroCluster Configurations
- MetroCluster Service Guide
- MetroCluster Management and Disaster Recovery Guide
- Tiebreaker Software Installation and Configuration Guide
- NetApp Interoperability Matrix
- Cisco Storage Interoperability Matrix

Last update: 2017-10-30 23:09

(NetApp Confidential - Limited Use) Nabil Fares | 01-05-2018 21:41

MetroCluster

What was released for MetroCluster in ONTAP 9.3?

The ONTAP 9.3 release includes a major feature, the introduction of MetroCluster IP (MC-IP), the new feature is supported on both AFF A700 and FAS 9000 platforms. For more details review the MetroCluster IP section.

Last update: 2018-01-03 18:26

(NetApp Confidential - Limited Use) Nabil Fares | 01-05-2018 21:41

Overview

Does the Data ONTAP 8.3.0 or ONTAP 9.0, 9.1,9.2 release affect 7-Mode stretch MetroCluster or fabric MetroCluster?

No. Stretch MetroCluster (SMC) and fabric MetroCluster (FMC) remain at their current levels in Data ONTAP 8.2.x in 7-Mode and will continue to be supported for that version.

Last update: 2017-07-06 21:31

(NetApp Confidential - Limited Use) Nabil Fares | 01-05-2018 21:41

Overview

Is MetroCluster a chargeable feature or a separate product?

No. MetroCluster is included in Data ONTAP 8.3.x and ONTAP 9.0, 9.1,9.2 and there are no separate chargeable features. MetroCluster does require additional hardware compared with a none MetroCluster configuration, as detailed in section 2.

Last update: 2017-07-06 21:33

(NetApp Confidential - Limited Use) Nabil Fares | 01-05-2018 21:41

Overview

Which licenses are required for MetroCluster?

There are no specific Data ONTAP licenses for MetroCluster or NetApp SyncMirror® software; all the functionality is included in the base Data ONTAP 8.3.x and ONTAP 9.X product licenses. Additional Data ONTAP licenses, such as for data protocols or NetApp SnapMirror® software, should be added as required and must be installed on both clusters. If the equivalent licenses are not available on the destination cluster, switchover does not work. The two clusters must have separate base licenses that generate distinct cluster serial numbers, otherwise, the metrocluster configure command fails.
Brocade or Cisco switch licenses are covered in section 2.3.

Last update: 2017-07-06 21:35

(NetApp Confidential - Limited Use) Nabil Fares | 01-05-2018 21:41

Overview

What are the key benefits of MetroCluster over SMC and FMC?

MetroCluster provides all the clustered Data ONTAP benefits (such as nondisruptive operations [NDO]) and extends them with site-level recovery. The NDO capabilities of MetroCluster (including for planned and unplanned events, capacity balancing, and tech refresh) go well beyond those of a 7-Mode MetroCluster solution.
The MetroCluster eight-node and four-node configurations provide both local failover (HA) capability and sitewide switchover. Because SMC and FMC use a single-node cluster at each site, they cannot provide local failover. The MetroCluster eight-node and four-node configuration also provide greater performance and scalability than SMC and FMC, because it is a configuration of HA pairs in two clusters.
Customers who consolidate SMC or FMC environments can leverage cost savings because the four and eight MetroCluster nodes share the same switch and ISLs.
Configuration and management are also simplified because of the larger node configuration, compared with multiple SMCs or FMCs in 7-Mode.
MetroCluster also integrates with management tools such as NetApp OnCommand® Unified Manager (OCUM) and OnCommand Performance Manager (OPM) for monitoring and alerts. Unmirrored aggregates are supported by CLI at this time in ONTAP 9.0.

Last update: 2017-07-06 21:40

(NetApp Confidential - Limited Use) Nabil Fares | 01-05-2018 21:41

Overview

Are all clustered Data ONTAP features supported in MetroCluster?

MetroCluster 8.3.x and 9.X supports all SAN and NAS protocol versions in clustered Data ONTAP for two- and four-node configurations. MetroCluster 9.X supports eight-node NAS and SAN configurations (as of 9.2 8-node SAN doesn't require an FPVR). For information about management application support, see section 5. MetroCluster supports all clustered Data ONTAP features and configurations with the following exceptions:

- NetApp Infinite Volume
- NetApp Storage Encryption (NSE) drive encryption
  Note: Data ONTAP systems can attach to NetApp E-Series storage arrays with FDE drives. The root aggregate can reside on unencrypted drives. For the list of systems that support this configuration, see the Interoperability Matrix Tool (IMT).
- Disk partitioning on the root aggregate (FAS2x00 is not supported with MetroCluster)
- SSD partitioning for NetApp Flash Pool™ intelligent caching (ADP)

Starting in clustered Data ONTAP 8.3.1, NetApp All Flash FAS is supported without a PVR. For versions earlier than clustered Data ONTAP 8.3.1, a PVR is required to support All Flash FAS. ONTAP 9.0 does not require a PVR to support ALL Flash FAS. In 8.3.2, Individual SSD-only aggregates do not require a PVR, as long as the node also contains aggregates with an HDD.

Switchover is disruptive to all SMB applications and clients, including SMB 3.0. This applies to all MetroCluster architectures including 8.3.1 onwards and ONTAP 9.X.

Last update: 2017-10-26 00:56

(NetApp Confidential - Limited Use) Nabil Fares | 01-05-2018 21:41

Overview

How does MetroCluster 8.3.x compare with SMC and FMC?

The table below compares MetroCluster 8.3.x and 9.0 with SMC and FMC.

Feature	MetroCluster 8.3.x	
Configurations	8.3.0 four-node fabric configuration only. ATTO FibreBridges are required except for array LUNs with NetApp FlexArray® software. 8.3.1 adds two-node configuration in three options: fabric, stretch with optical SAS, and stretch with FibreBridges. ONTAP 9.0 adds support for eight-node fabric configurations. ATTO FibreBridges are required except for array LUNs with NetApp FlexArray® software. FC switches and ISLs required. ONTAP 9.1 adds support for additional platforms, VGE (Volume Encryption) and support for up to 8 ISL's	Fab Stre with
Local HA + remote switchover	Eight-node and four-node configuration: yes; most events need only local HA. Two-node configuration requires remote switchover; there is no local HA. Failure or panic of one node (if the storage is still available) triggers automatic switchover.	No, for a
Unmirrored aggregate support	8.3.x No, all aggregates, including root aggregates, must be mirrored. Starting in ONTAP 9.0, data aggregates can be unmirrored or mirrored. At least one mirrored data aggregate per cluster must exist at each site. The root aggregate must be mirrored on all supported releases	Yes supp
Management tool support	Yes, including OCUM Config Advisor, OPM, and health monitors. Tiebreaker is available for monitoring; a Product Variance Request (PVR is required for automated switchover).	Litt avai
Number of nodes	Eight nodes: four-node clusters at each site. Four nodes: two-node cluster at each site. Two nodes: single-node cluster at each site.	HA
ISL encryption	Yes, for the fabric configurations with Brocade 6510.	Yes

(NetApp Confidential - Limited Use) Nabil Fares | 01-05-2018 21:41

support		

Last update: 2017-11-01 21:11

(NetApp Confidential - Limited Use) Nabil Fares | 01-05-2018 21:41

Overview

What are the maximum distances for stretch MetroCluster configurations?

The table below shows the maximum distances for stretch MetroCluster configurations.

Speed (Gbps)	Maximum Distance (m)			
	16Gbps SW SFP			16Gbps LW SFP
	OM2	OM3	OM4	Single-Mode Fiber[1]
2	n/a	n/a	n/a	n/a
4	150	270	400	500
8	50	150	190	500
16	35	100	125	500

[1]Single-mode (SM) LW SFPs are only supported for FC-VI connectivity.

In IMT, distance based on FCVI is given. FCVI distance is the same for SMC/FMC.

Storage distance are different. SMC: SAS, FMC: Fabric

The above table is good for FC distance (not relevant to NetApp). For all FC links.

a. Between FCVI ports, - smc direct/bridge, any platform, depends on SFP – correct cable is required. Example:
   If 8g SFP, cable OM3 will take 150m
   8g SFP LW, then 500m
   We do not allow LW SFP in FMC
b. Stretch bridge
   Based on LR/SR SFP – distance is determined.
   6500: 8g – only SW SFP
   7500: 16g – both allowed
   Platform card dependent.

Supported SMC Direct SAS3 Storage cabling scenarios:

Scenario -1: FAS9000 X92071A MiniSAS HD port **<->** MiniSAS HD X66047A/ X66048A LC **<->** LC MultiMode 100m cable LC **<->** LC X66047A/ X66048A MiniSAS HD port on DS212C, DS224C or DS460C shelfs.

Scenario -2:FAS8200 onboard MiniSAS HD port **<->** MiniSAS HD X66047A/ X66048A LC**<->** LC MultiMode 100m cable LC **<->** LC X66047A/ X66048A

(NetApp Confidential - Limited Use) Nabil Fares | 01-05-2018 21:41

Overview

MiniSAS HD port on DS212C, DS224C, DS460C shelfs.

Scenario -3: FAS8200 with X2069-R6 QSFP port **<->** QSFP X66014A-R6 LC **<->**LC Single Mode 500m cable LC **<->** LC X66014A-R6 QSPF ß> QSFP port on DS2246, DS4243 or DS4246 shelfs.

Scenario -4: FAS80xx with X2069-R6 QSFP port **<->** QSFP X66014A-R6 LC **<->** LC Single Mode 500m cable LC **<->** LC X66014A-R6 QSPF **<->** QSFP port on DS2246, DS4243 or DS4246 shelfs.

Scenario -5:FAS80xx onboard SAS QSFP port **<->** QSFP X66014A-R6 LC **<->** LC Single Mode 500m cable LC **<->** LC X66014A-R6 QSPF **<->** QSFP port on DS2246, DS4243 or DS4246 shelfs.

Last update: 2017-11-01 22:49

(NetApp Confidential - Limited Use) Nabil Fares | 01-05-2018 21:41

Requirements

What are the basic MetroCluster configurations?

All MetroCluster configurations consist of an independent cluster at each site. In Data ONTAP 8.3.0, the cluster consists of exactly two nodes per site or one HA pair: a total of four nodes. Starting in 8.3.1, the two-node configuration is also available, consisting of a single-node cluster per site. Starting in ONTAP 9, the eight-node configuration is available, comprising of a four-node cluster at each site. FAS (including FlexArray) controllers are supported; all the systems in a MetroCluster configuration must be exactly the same model. Specific supported items are documented in this section; however, always consult the IMT as the authoritative source for supported configurations. All hardware must be ordered and purchased from NetApp. The configuration is active-active so that each cluster can serve its own separate workloads while providing disaster recovery (DR) protection for the other. In clustered Data ONTAP 8.3.0, a MetroCluster configuration is a fabric-attached configuration that consists of a clustered Data ONTAP two-node cluster at each of the two sites. The four nodes are collectively known as a DR group. Supported, dedicated FC switches and FibreBridges are also required at each site.

Clustered Data ONTAP 8.3.0 supports one DR group. Both the minimum and maximum supported configuration size is a two-node cluster at each of the two sites.

Starting in clustered Data ONTAP 8.3.1, in addition to the existing four-node fabric configuration, two-node configurations are available. There are three options for the two-node configuration:

- **Two-node fabric configuration.** This option is similar to the four-node configuration except that there is only one node per site. Supported, dedicated FC switches and FibreBridges are required at each site.
- **Two-node stretched configuration with stretched optical cables.** Storage is attached to SAS ports on both nodes by using SAS cables. The FC-VI connections are direct between the controllers.
- **Two-node stretched configuration with FibreBridges.** Storage is attached to FC ports on both nodes with FibreBridges. The FC-VI connections are direct between the controllers.

Starting in clustered Data ONTAP 9.0, in addition to the existing two-node and four-node fabric configurations, eight-node configurations (NAS only) are available.

The MetroCluster eight-node configuration consists of an ONTAP four-node cluster at each of the two sites. These are deployed as two separate DR groups. Supported and dedicated FC switches and FibreBridges are also required at each site.

In ONTAP 9.0, the MetroCluster two-node and - remains the same as described in the clustered DATA ONTAP 8.3.0, 8.3.1, and 8.3.2 descriptions. For ONTAP 9.0 AUSO is supported for four-node and eight node configurations, this provides automatic switchover when an HA pair goes down.

(NetApp Confidential - Limited Use) Nabil Fares | 01-05-2018 21:41

Requirements

Last update: 2017-10-26 22:02

(NetApp Confidential - Limited Use) Nabil Fares | 01-05-2018 21:41

Requirements

What are the front-end network requirements for MetroCluster?

MetroCluster preserves the identity of switched-over objects; LIF IP addresses and FC WWPNs and WWNs are identical after switchover. Therefore, the TCP/IP layer 2 network and SAN fabrics must span both sites so that clients and hosts can access the resources by using the same paths at either site.

MetroCluster for clustered Data ONTAP does not implement the /etc/mcrc file that is available in 7-Mode to provide a different configuration after switchover.

Last update: 2017-10-26 22:12

(NetApp Confidential - Limited Use) Nabil Fares | 01-05-2018 21:41

Requirements

Do the IMT and Config Advisor support MetroCluster on clustered Data ONTAP 8.3.x/ ONTAP 9.0?

Yes. As always, the IMT is the authoritative reference for supported configurations. Config Advisor 4.x supports MetroCluster 8.3.x and has been enhanced with several configuration rules that are specific to MetroCluster. Config Advisor 4.x, together with the MetroCluster plug-in files and installation guide, are available on the Field Portal on the Config Advisor main page.

Last update: 2017-10-26 22:13

(NetApp Confidential - Limited Use) Nabil Fares | 01-05-2018 21:41

Requirements

Does the NetApp AutoSupport® tool provide support for MetroCluster 8.3.x?

Yes, the NetApp My AutoSupport (ASUP™) tool supports MetroCluster 8.3.x.

Last update: 2017-10-26 22:14

(NetApp Confidential - Limited Use) Nabil Fares | 01-05-2018 21:41

Requirements

How can I size a MetroCluster configuration?

SPM supports sizing for MetroCluster running on ONTAP 8.3.x and ONTAP 9.X. Individual workloads can be assigned to the cluster at either site, and a common FAS controller for all workloads is determined. SPM provides options to adjust the sizing based on the CPU impact in the event of an HA takeover. Sizing can also be adjusted to provide additional headroom to minimize the performance impact of a failover after takeover when one node is performing the work of all four original nodes.

Last update: 2017-10-26 22:16

(NetApp Confidential - Limited Use) Nabil Fares | 01-05-2018 21:41

Requirements

Can the ISL be shared between the two DR groups in an eight-node MetroCluster configuration?

Yes. The ISL must be shared with the two DR groups in the eight-node MetroCluster configuration. As of 9.2 ISL sharing is supported on the two-node and four-node MetroCluster configurations.

Last update: 2017-10-26 22:17

(NetApp Confidential - Limited Use) Nabil Fares | 01-05-2018 21:41

Requirements

Which FAS controller models are supported?

Always consult the IMT for supported controllers.

All controllers across DR groups must be the same model.

FlexArray and FAS controllers that run FlexArray virtualization software are also supported. Mixing FAS and FlexArray controllers in the same MetroCluster configuration is not supported.

Last update: 2017-10-26 22:18

(NetApp Confidential - Limited Use) Nabil Fares | 01-05-2018 21:41

Requirements

What are the platform mixing rules for the 8-node MetroCluster configuration?

In the 8-node MetroCluster configuration, there are two 2-node HA pairs at each site making up the cluster. The eight controllers do not need to be the same type. However, each DR group must have four matching controllers at each site. All HA pairs must follow the standard platform mixing rules for ONTAP. For more information, see the Clustered Data ONTAP Storage Platform Mixing Rules.

Last update: 2017-10-26 22:19

(NetApp Confidential - Limited Use) Nabil Fares | 01-05-2018 21:41

Requirements

Does the 8-node MetroCluster configuration support SAN protocols?

As of 9.2 yes. Prior to ONTAP 9.2 SAN support for 8-nodes requires an FPVR approval. ONTAP release 9.0 and 9.1 releases only NAS is supported on the 8-node MetroCluster configurations. The 2-node and 4-node MetroCluster configurations continue to support SAN configurations.

Last update: 2017-10-26 22:19

(NetApp Confidential - Limited Use) Nabil Fares | 01-05-2018 21:41

Requirements

Can I mix NAS and SAN in the 8-node MetroCluster configuration?

As of 9.2 yes. In the ONTAP 9.0 release, the 8-node MetroCluster configuration only supports NAS. The 2-node and 4-node MetroCluster configurations continue to support SAN configurations. Prior to 9.2 8-node MetroCluster for SAN is only PVR based.

Last update: 2017-10-26 22:20

(NetApp Confidential - Limited Use) Nabil Fares | 01-05-2018 21:41

Requirements

Are cluster interconnect switches required in each HA pair?

The cluster interconnect switches are optional in the four-node MetroCluster configurations. In the eight-node configuration cluster interconnect switches are required. NetApp expects that, for cost and simplicity, the majority of four-node MetroCluster configurations consist of two-node switchless clusters. Because the two-node configuration uses single-node clusters, there is no cluster interconnect.

Last update: 2017-10-26 22:21

(NetApp Confidential - Limited Use) Nabil Fares | 01-05-2018 21:41

Requirements

Which cluster interconnect switches are supported for an 8 or 4-node MetroCluster configuration?

The HA pairs at each site can be configured as switchless or switched. Switched configurations can use any cluster interconnect switch supported in clustered Data ONTAP. The cluster interconnect switch must be the same at both sites. For the list of supported cluster interconnect switches, see the Hardware Universe.

Last update: 2017-10-26 22:22

(NetApp Confidential - Limited Use) Nabil Fares | 01-05-2018 21:41

Requirements

Which back-end storage is supported in a MetroCluster configuration with array LUNs?

EMC, HDS, HP 3PAR, and NetApp E-Series storage (including EF-Series) are supported. For the most current list, see the IMT. The configuration must be identical at both sites: the same FAS or FlexArrary model, vendor array, disk type, and LUN size. Starting with Data ONTAP 8.3, FAS disk shelves are optional in a Data ONTAP configuration that includes storage arrays. The root aggregate can be created on array LUNs, and the controllers can boot from those LUNs. Thus, a MetroCluster configuration with storage arrays can exclusively use array LUNs or a combination of NetApp FAS shelves and array LUNs. The FibreBridge is used only to attach FAS disk shelves.

Last update: 2017-10-26 22:23

(NetApp Confidential - Limited Use) Nabil Fares | 01-05-2018 21:41

Requirements

If the storage is purely array LUNs, does MetroCluster support combining the front-end and back-end fabric switches?

No. MetroCluster still requires dedicated switches for the back-end fabric switches.

Last update: 2017-10-26 22:24

(NetApp Confidential - Limited Use) Nabil Fares | 01-05-2018 21:41

Requirements

Can controller types be mixed in a MetroCluster configuration?

In the two-node and four-node configurations, all controllers in the MetroCluster DR group must be the identical FAS, AFF, or FlexArray model (for example, four FAS8040s). In an eight-node configuration each node in a DR group must be identical. The two four node DR groups in an eight-node configuration can vary, e.g. DR group #1 can have AFF8080 while DR group #2 can have FAS8080. The NVRAM is mirrored both to the HA partner and cross-site to the DR partner node (see section 3.1 for more information) and therefore the model strings must match exactly. AFF, FAS and FlexArray nodes cannot be mixed in the DR group (for example, you cannot configure one cluster with a FAS3250 HA pair and the other cluster with a V3250 HA pair). DR partner nodes should have the same hardware configuration, including storage and front-end network ports, to allow LIFs to be assigned correctly to ports on the other cluster during switchover.

Last update: 2017-10-26 22:24

(NetApp Confidential - Limited Use) Nabil Fares | 01-05-2018 21:41

Requirements

Can MetroCluster nodes be mixed with nodes other than MetroCluster in the same cluster?

No, all nodes must be configured for MetroCluster.

Last update: 2017-10-26 22:25

(NetApp Confidential - Limited Use) Nabil Fares | 01-05-2018 21:41

Requirements

How can I verify that the correct SFP is used for the 16Gb FC-VI connection?

The SFP for the FC-VI 16Gb ports must be the QLogic-branded SFP. For instructions on how to verify the correct SFP, and for information about symptoms if incorrect SFPs are used, see https://kb.netapp.com/support/index?page=content&id=S%3A2022898.

Last update: 2017-10-26 22:26

(NetApp Confidential - Limited Use) Nabil Fares | 01-05-2018 21:41

Requirements

Are the port efficiency improvements for the FAS8020 controller supported on the AFF8020 controller?

Yes. Both the FAS8020 and the AFF8020 support sharing FC-VI and FC connectivity on the same initiator card. These improvements are available only on clustered Data ONTAP MetroCluster configurations.

Last update: 2017-10-26 22:26

(NetApp Confidential - Limited Use) Nabil Fares | 01-05-2018 21:41

Requirements

What are the disk requirements for NetApp SyncMirror with MetroCluster?

NetApp SyncMirror technology requires disks of the same architecture in both plexes; each aggregate must be mirrored to a disk of the same type. It is possible to disable RPM and size matching, but NetApp strongly recommends that you use an identical disk configuration at both sites.

Last update: 2017-10-26 22:27

(NetApp Confidential - Limited Use) Nabil Fares | 01-05-2018 21:41

Requirements

Can aggregates be configured as RAID DP or RAID 4?

Yes, either NetApp RAID DP technology or RAID 4 is supported for aggregates (including the root aggregate) on each node.

Last update: 2017-10-26 22:28

(NetApp Confidential - Limited Use) Nabil Fares | 01-05-2018 21:41

Requirements

Can we do a RAID-TEC aggregate on an MCC?

Yes, it is supported.

Last update: 2017-10-26 22:29

(NetApp Confidential - Limited Use) Nabil Fares | 01-05-2018 21:41

Requirements

What is the minimum number of disks that a data aggregate can contain?

For RAID 4 data aggregates, the minimum number of disks is 3 (2 data, 1 parity). For RAID DP, the minimum number of disks is 5 (3 data, 2 parity). As for any Data ONTAP configuration, having more drives in an aggregate is likely to give better performance, and aggregates with few drives do not perform optimally.

Last update: 2017-10-26 22:29

(NetApp Confidential - Limited Use) Nabil Fares | 01-05-2018 21:41

Requirements

Can the cluster contain any data before initializing MetroCluster?

No. There cannot be any SVMs existing before running the metrocluster configure command. If data is already on the cluster, the command fails.

Last update: 2017-10-26 22:30

(NetApp Confidential - Limited Use) Nabil Fares | 01-05-2018 21:41

Requirements

Does MetroCluster support unmirrored aggregates?

Yes. Starting in ONTAP 9.0 MetroCluster supports both unmirrored and mirrored aggregates.

Last update: 2017-10-26 22:31

(NetApp Confidential - Limited Use) Nabil Fares | 01-05-2018 21:41

Requirements

Can mirrored aggregates be converted to an unmirrored aggregate?

Yes. Starting in ONTAP 9.0 unmirrored aggregates are supported. Existing mirrored aggregates can be converted to unmirrored aggregates with the plex delete CLI command. Deleting a mirrored aggregate plex is disallowed when not in switchover when:

- The aggregate is hosting an SVM root volume
- The aggregate is hosting a MetroCluster MDV (metadata volume)
- The aggregate is a MetroCluster root aggregate

Last update: 2017-10-26 22:34

(NetApp Confidential - Limited Use) Nabil Fares | 01-05-2018 21:41

Requirements

Can unmirrored aggregates be converted to mirrored aggregates?

Yes. Starting in ONTAP 9, MetroCluster supports conversion of unmirrored aggregates to mirrored aggregates. Unmirrored aggregates can be converted to mirrored aggregates with the mirror <aggregate_name> CLI command.

Last update: 2017-10-26 22:35

(NetApp Confidential - Limited Use) Nabil Fares | 01-05-2018 21:41

Requirements

What is the minimum number of aggregates required in MetroCluster?

Each node requires its own mirrored root aggregate.

In 8.3.0, the metrocluster configure command requires a minimum of two mirrored data aggregates on each cluster with at least 10GB free to initialize the environment. A best practice is to create an eligible data aggregate on each node, although it is possible to have the two data aggregates on just one node in each cluster. If additional empty data aggregates have been created, they must also be mirrored before running the metrocluster configure command, because MetroCluster does not support unmirrored aggregates. See the note in the following question for the PVR option to run MetroCluster 8.3.0 with only one data aggregate per cluster.

In clustered Data ONTAP 8.3.x, having two mirrored data aggregates continues to be the default and the configuration that NetApp recommends. For the two-node architecture, two data aggregates must be created on **each of the two single-node clusters** before running metrocluster configure. With an advanced mode option, any MetroCluster configuration can be set up with just one data aggregate per cluster.

Starting in ONTAP 9, MetroCluster supports both unmirrored and mirrored data aggregates. It should be noted that at least a single mirrored data aggregate per cluster is required to hold the SVM root and MDV volumes.

Last update: 2017-10-26 22:37

(NetApp Confidential - Limited Use) Nabil Fares | 01-05-2018 21:41

Requirements

Why are two data aggregates on each cluster recommended to configure MetroCluster?

The metrocluster configure command creates two system metadata volumes (MDVs) on each cluster. These volumes are created at 10GB in size and are used to queue and log configuration replication services (CRS) transactions for configuration replication to the other cluster over the cluster peering network. The default MetroCluster configuration process requires that two data aggregates exist on each of the two clusters, with each aggregate preferably on a separate node, for resiliency reasons. If there are not two data aggregates on each of the two clusters with sufficient space to create the metadata volumes, the initial default configuration fails. These data aggregates do not need to be dedicated to the system volume; user volumes can be created within the aggregate. For more information about CRS, see section 3.1.

Additional mirrored and unmirrored data aggregates can be created as required after MetroCluster is configured.

Note: In 8.3.0, a PVR is available for a post-installation process to modify the configuration to contain only one data aggregate in each cluster. This single aggregate then contains both metadata volumes and all the data. This modification allows an active-passive configuration with only one larger data aggregate in each HA pair. Starting in 8.3.1, an advanced mode modifier on the metrocluster configure command allows initial setup with a single aggregate per cluster, and the PVR is no longer required. Although the best practice remains as two separate data aggregates, this configuration might be helpful in certain small configurations, particularly with FAS8020. For more information about layouts in small systems, see the presentation Small Configurations for MetroCluster 8.3.

Last update: 2017-10-26 22:38

(NetApp Confidential - Limited Use) Nabil Fares | 01-05-2018 21:41

Requirements

Does storage need to be added in fixed increments?

Storage added after the initial MetroCluster configuration does not need to be in any set number of shelves. One shelf at a time per site can be added. NetApp recommends that you add storage so that each shelf contains disks in only one pool.

Last update: 2017-10-26 22:39

(NetApp Confidential - Limited Use) Nabil Fares | 01-05-2018 21:41

Requirements

What are the system limits for MetroCluster?

Detailed limits are documented in a document that is specifically about MetroCluster in the Maximum Configuration Guides on the Field Portal. These limits are the maximum supported for MetroCluster configurations and have been tested to achieve negotiated switchover and switchback completion within two minutes. Note that all SMB sessions experience a disruption on both switchover and switchback in all configurations. These limits are not enforced by Data ONTAP, but they are the documented supported limits. If the number of volumes per node is exceeded, an EMS message (soft limit) is issued.

Last update: 2017-10-26 22:39

(NetApp Confidential - Limited Use) Nabil Fares | 01-05-2018 21:41

Requirements

Do MetroCluster configurations with array LUNs require FAS shelves for the root aggregate?

No, MetroCluster can be configured exclusively with array LUNs (including the root aggregates), exclusively with FAS disk shelves, or with a combination of both. If you deploy MetroCluster with both FAS disk shelves and array LUNs, NetApp recommends that you create the root aggregate or volumes on FAS disk shelves and use the array LUNs for data aggregates. With this configuration, the minimum FAS disk shelf requirement is two shelves, or one shelf per site, with 48 drives total. This approach makes six drives available for each node’s root aggregate and spares, and the same number of disks for the mirror copy.

Last update: 2017-10-26 22:40

(NetApp Confidential - Limited Use) Nabil Fares | 01-05-2018 21:41

Requirements

Does MetroCluster support advanced disk partitioning for the root aggregate?

No. FAS2200 and FAS2500, which use root aggregate disk partitioning, are not supported on MetroCluster.

Last update: 2017-10-26 22:41

(NetApp Confidential - Limited Use) Nabil Fares | 01-05-2018 21:41

Requirements

Does MetroCluster support SSD advanced disk partitioning for Flash Pool?

No. Although Flash Pool **is** supported on MetroCluster, SSD disk partitioning is not supported with SyncMirror, whether it is used in MetroCluster or as local SyncMirror.

Last update: 2017-10-26 22:41

(NetApp Confidential - Limited Use) Nabil Fares | 01-05-2018 21:41

Requirements

Does SMC support SSD partitioning for Flash Pool?

No. MetroCluster cannot use Flash Pool aggregates that use storage pools for their cache storage. In addition, SyncMirror cannot use Flash Pool aggregates that use storage pools for their cache storage.

Last update: 2017-10-26 22:42

(NetApp Confidential - Limited Use) Nabil Fares | 01-05-2018 21:41

Requirements

Are SSD-only aggregates supported in a MetroCluster configuration without requiring a PVR?

No PVR is required

Last update: 2017-10-26 22:42

(NetApp Confidential - Limited Use) Nabil Fares | 01-05-2018 21:41

Requirements

Which switches are supported for the storage fabric?

Four identical switches (same vendor and model) are required for each MetroCluster configuration. Each MetroCluster configuration requires dedicated switches; sharing between multiple MetroCluster configurations or with host or application traffic is not supported. All four switches must be licensed for the same number of ports. At the time of the writing, MetroCluster is supporting the following switches; however, you should always verify the current list on the IMT:

- Brocade 6505, 6510 and G620 (16Gb switches, configured with 16Gb SFPs) are supported.
- Cisco MDS 9148 (8Gb switch, configured with 8Gb SFPs) is supported in Data ONTAP 8.3 only.
- Cisco MDS 9148S is supported in Data ONTAP 8.3.1 or later (16Gb switch configured with 16Gb SFPs).
- Cisco MDS 9250i is supported in Data ONTAP 8.3.2 or later for IP ISL connectivity.
- Brocade 7840 is supported from ONTAP 9.1 onwards.

Last update: 2017-10-26 22:46

(NetApp Confidential - Limited Use) Nabil Fares | 01-05-2018 21:41

Requirements

Is there any feature or functional differences between a MetroCluster configuration using FC ISL connectivity and FCIP ISL connectivity?

Starting in clustered Data ONTAP 8.3.2, NetApp provides FCIP ISL connectivity as an additional option for ISL connectivity, in addition to FC ISL connectivity. Both FC and FCIP MetroCluster configurations provide synchronous replication and continuous availability to protect your data.

Here are a few differences between MetroCluster FC and FCIP MetroCluster configurations:

- The Cisco MDS 9250i cannot be connected to more than one MetroCluster cluster.
- Only 10Gbps FCIP ISL connectivity is supported.
- Only one FCIP port is supported.
- Link-write acceleration is not supported.
- Compression is not supported.
- The FCIP ISLs between the MetroCluster clusters cannot be shared.

Last update: 2017-10-26 22:49

(NetApp Confidential - Limited Use) Nabil Fares | 01-05-2018 21:41

Requirements

Which switches are supported for FCIP ISL connectivity?

The Cisco MDS 9250i is supported for FCIP ISL connectivity. Only 10Gbps FCIP Ethernet ports are supported for ISL connectivity on the Cisco 9250i. FCIP MetroCluster configurations are supported starting in Data ONTAP 8.3.2. The Brocade 7840 is also supported.

Last update: 2017-10-26 22:50

(NetApp Confidential - Limited Use) Nabil Fares | 01-05-2018 21:41

Requirements

Are any additional licenses required for the Cisco 9250i/Brocade 7840 FCIP switches?

No. When the Cisco 9250i FCIP switches are purchased from NetApp, they come bundled with Enterprise licenses and SFPs. At this time the Brocade 7840 is already on the price list but components/licenses need to be ordered individually.

Note: Many restrictions apply specifically to Cisco MDS 9250i, please refer to the IMT and Config Advisor for feature comparability between 9250i and Brocade 7840.

Last update: 2017-10-26 22:50

(NetApp Confidential - Limited Use) Nabil Fares | 01-05-2018 21:41

Requirements

Can I get more information about the Cisco MDS 9250i FCIP switch?

Yes. More information about the Cisco MDS 9250i FCIP switch is available in the Cisco MDS 9250i Multiservice Fabric Switch Data Sheet Cisco MDS 9250i Multiservice Fabric Switch Data Sheet

Last update: 2017-10-26 22:52

(NetApp Confidential - Limited Use) Nabil Fares | 01-05-2018 21:41

Requirements

Is compression supported on the Cisco MDS 9250i FCIP switch?

No. Compression is not supported on the Cisco MDS 9250i FCIP switch.

Last update: 2017-10-26 22:53

(NetApp Confidential - Limited Use) Nabil Fares | 01-05-2018 21:41

Requirements

What are the steps to configure the Cisco MDS 9250i FCIP switch for MetroCluster?

The steps to configure the Cisco MDS 9250i FCIP switch are available in knowledge base article# 1015624.

Last update: 2017-10-26 22:53

(NetApp Confidential - Limited Use) Nabil Fares | 01-05-2018 21:41

Requirements

How many ports are licensed when I purchase the Cisco MDS 9250i FCIP switch through NetApp?

By default, there are 12 ports licensed on each FCIP switch. This can be increased up to 48 ports in the Quote Tool.

Last update: 2017-10-26 22:54

(NetApp Confidential - Limited Use) Nabil Fares | 01-05-2018 21:41

Requirements

Can I get more information about the Brocade 7840 FCIP switch?

Yes. More information about the Brocade 7840 FCIP switch is available in the Brocade 7840 Switch DataSheet

Last update: 2017-10-26 22:57

(NetApp Confidential - Limited Use) Nabil Fares | 01-05-2018 21:41

Requirements

Is it required to purchase the switches from NetApp?

Yes, all switches for the back-end storage fabric must be ordered and purchased from NetApp. A customer can reuse existing switches if the switches are on the support matrix and only if they were purchased from NetApp. NetApp provides initial-level support for the switches that are used in MetroCluster.

Last update: 2017-10-26 22:57

(NetApp Confidential - Limited Use) Nabil Fares | 01-05-2018 21:41

Requirements

Do switches ordered through NetApp include SFPs?

Yes. The appropriate number of shortwave SFPs are included for all Brocade and Cisco switches that are ordered through NetApp. 16Gb SFPs are included for all these switches, except the Cisco 9148, which includes 8Gb SFPs. The Cisco 9148S, however, does include 16Gb SFPs. To connect the switch to ISLs, shortwave or longwave SFPs can be used. Brocade 16Gb ISL SFPs can be ordered separately (X-R000198-R6).

Last update: 2017-10-26 22:58

(NetApp Confidential - Limited Use) Nabil Fares | 01-05-2018 21:41

Requirements

What is included with the Brocade switches that are ordered through NetApp?

The Brocade switches that are ordered through the Quote Tool in a new MetroCluster configuration include the following items:

- Four Brocade switches (6505 or 6510)
- 16Gb SFPs
- An Enterprise license bundle:
    - Fabric Vision—includes Fabric Watch and Advanced Performance Monitoring
    - Extended fabric (required if the distance is greater than 3.75 miles [6 kilometers])
    - ISL trunking (used if there are two or more ISLs per fabric)
- Brocade Network Advisor Pro+, which includes the capability for switches to send event messages to AutoSupport and can be used with any of the Brocade switches in your environment

Last update: 2017-10-26 23:00

(NetApp Confidential - Limited Use) Nabil Fares | 01-05-2018 21:41

Requirements

How is licensing handled for the reuse of existing supported Brocade switches?

If existing switches are reused (for example, a 6510 from an FMC), the extended fabric and trunking licenses can be ordered if the switches do not already include them. NetApp also strongly recommends the Brocade Network Advisor Pro+ license for advanced monitoring and My AutoSupport integration with CallHome.

This license is likely already available with switches that are purchased through NetApp, or it can also be ordered as an add-on. In QuoteEdge, select Brocade Network Advisor (BNA) in the Software section. Be sure to click More to display the entire list. Scroll down the BNA list of licenses to SAN Pro Plus License for 2560 Switch Ports, select this license, and continue the QuoteEdge process. The PN SW-BSW-NTWADV-SAN-PLU is included in the quote.

Last update: 2017-10-26 23:01

(NetApp Confidential - Limited Use) Nabil Fares | 01-05-2018 21:41

Requirements

What is included with the Cisco switches that are ordered through NetApp?

The Cisco switches that are ordered through the Quote Tool include the following items:

- Four Cisco switches:
  - Cisco MDS 9148 in clustered Data ONTAP 8.3.0
  - Cisco MDS 9148S in clustered Data ONTAP 8.3.1
  - Cisco MDS 9250i in clustered Data ONTAP 8.3.2 for FCIP ISL connectivity
- SFP modules:
  - Cisco 9148 is 8Gbps
  - Cisco 9148S and Cisco 9250i are 16Gbps

Note: The Cisco 9148S and 9250i switches bundle the Enterprise package into the same part number.

Last update: 2017-10-26 23:04

(NetApp Confidential - Limited Use) Nabil Fares | 01-05-2018 21:41

Requirements

Can MetroCluster 8.3.x share the same switches and ISLs with an FMC during a transition?

Yes. For information about Brocade 6510 only, see section 3.3. Switch sharing is supported only during the transition from 7-Mode fabric MetroCluster to MetroCluster 8.3.x, and only one FMC and one MetroCluster 8.3.x can be attached at the same time for transition.

Last update: 2017-10-26 23:05

(NetApp Confidential - Limited Use) Nabil Fares | 01-05-2018 21:41

Requirements

Is the 8Gb Brocade 6510 supported?

In FMC (7-Mode), the 6510 is sold with 8Gb SFPs; however, only 16Gb SFPs are supported with MetroCluster 8.3.x and ONTAP 9.0. All components in the 8.3.x and ONTAP 9.0 configurations (apart from ISLs) must connect only to 16Gb SFPs, including the FC initiators, FC-VI, and ATTO. Therefore, if Brocade 6510 switches that are currently used for FMC are reused in MetroCluster 8.3.x and ONTAP 9.0 or during a transition, 16Gb SFPs are required for the MetroCluster 8.3.x and ONTAP 9.0 connections. For more information, see section 3.3 on transition.

Last update: 2017-10-26 23:06

(NetApp Confidential - Limited Use) Nabil Fares | 01-05-2018 21:41

Requirements

Is trunking required for Brocade switches?

If two or more ISL connections are in the fabric, then trunking should be used when connecting the Brocade switches. If trunking is not an option, then OOD must be utilized. OOD is supported starting with ONTAP 9.1. For a single ISL connection, trunking is not required. NetApp recommends a minimum of two ISLs. You should verify that the xWDM vendor supports trunking on the Brocade FC switch. In cases where the xWDM vendor does not support trunking, you can either use a different xWDM vendor or file a PVR with NetApp to use traffic isolation (maximum of two ISLs per fabric). With 9.1, PVR is no longer needed.

Last update: 2017-10-26 23:06

(NetApp Confidential - Limited Use) Nabil Fares | 01-05-2018 21:41

Requirements

What is the required latency for the ISLs?

NetApp does not specify the required round-trip latency on the ISLs. Rather, NetApp specifies the maximum supported distance and no active components. For MetroCluster deployments using the Brocade 6505 or 6510 FC switch the maximum distance is 185 miles (300 kilometers). All other configurations using FC or FCIP switches have a maximum distance of 120 miles (200 kilometers). The ISL must conform to the requirements that were stated earlier and must be supported by the FC switch and SFP.

Last update: 2017-10-26 23:07

(NetApp Confidential - Limited Use) Nabil Fares | 01-05-2018 21:41

Requirements

Do all the ISLs in both fabrics have to be the same speed and length?

All ISLs between the switches should be the same speed, and there should be the same number of ISLs in each fabric (from one to eight). If multiple ISLs are in a fabric, all ISLs in the same fabric must be the same physical length. ISLs in one fabric can be of different physical lengths than the ISLs in the second fabric (for example, if different vendors are used for the two connections). However, NetApp recommends for simplicity and supportability that all ISLs in the same MetroCluster configuration be the same length.

Last update: 2017-10-26 23:12

(NetApp Confidential - Limited Use) Nabil Fares | 01-05-2018 21:41

Requirements

Can separate MetroCluster configurations share the same switches and ISLs?

A FPVR is required to share switches and ISL’s between different MetroCluster configurations.

Last update: 2017-10-26 23:12

(NetApp Confidential - Limited Use) Nabil Fares | 01-05-2018 21:41

Requirements

What is the maximum distance that is supported between the two clusters?

The maximum supported distance is 185 miles (300 kilometers), depending on the switch that you select.

Last update: 2017-10-26 23:13

(NetApp Confidential - Limited Use) Nabil Fares | 01-05-2018 21:41

Requirements

What distances are supported using LW optics between the switch and the xWDM?

MetroCluster supports the maximum distance defined by the SFPs specification. Check the IMT for more information.

Last update: 2017-10-26 23:13

(NetApp Confidential - Limited Use) Nabil Fares | 01-05-2018 21:41

Requirements

Is traffic isolation used?

No, MetroCluster uses trunking and QoS to balance and consolidate ISL utilization.

Last update: 2017-10-26 23:14

(NetApp Confidential - Limited Use) Nabil Fares | 01-05-2018 21:41

Requirements

Is out-of-order delivery (OOD) supported on the ISL?

OOD is supported starting ONTAP 9.1.

Last update: 2017-10-26 23:14

(NetApp Confidential - Limited Use) Nabil Fares | 01-05-2018 21:41

Requirements

Is ISL encryption supported?

Yes. MetroCluster supports ISL encryption with the Brocade 6510 switch only. No other encryption devices are supported anywhere else in the fabric, including in the ISLs across the WAN.

Last update: 2017-10-26 23:15

(NetApp Confidential - Limited Use) Nabil Fares | 01-05-2018 21:41

Requirements

Is ISL compression supported?

No, compression is not supported and should not be enabled on the switches.

Last update: 2017-10-26 23:15

(NetApp Confidential - Limited Use) Nabil Fares | 01-05-2018 21:41

Requirements

Can the FC switch be shared with all four controllers in an eight-node MetroCluster configuration?

Yes. The FC switch must be shared with up to four controllers in the eight-node MetroCluster configuration. Be sure to verify you have licensed the required number of ports on the FC switch.

Last update: 2017-10-26 23:16

(NetApp Confidential - Limited Use) Nabil Fares | 01-05-2018 21:41

Requirements

Can the FC switches be non-disruptively replaced?

The FC switch can be non-disruptively replaced if doing an upgrade of the switch from the same vendor. If changing the switch vendor, then it cannot be done non-disruptively.

Last update: 2017-10-26 23:16

(NetApp Confidential - Limited Use) Nabil Fares | 01-05-2018 21:41

Requirements

What specific considerations would be required for the FAS9000 / A700 platforms?

4 FCVI from HA pair to switch, 4 HBA from HA pair to switch, 2 for ATTO, 4 for ISL – total of 14 ports. This forces the need to get either additional 12 port license (Cisco 9148S or Brocade 6505) or buy the Brocade 6510 24 port FC switch. Given that customers can’t intermix their FC switches between Brocade/Cisco, this could be an issue. So the number of licensed ports on the switches need to be accounted for while quoting for the system.

Last update: 2017-10-26 23:17

(NetApp Confidential - Limited Use) Nabil Fares | 01-05-2018 21:41

Requirements

Which configurations require FibreBridges?

All eight-node and four-node configurations with NetApp FAS shelves require FibreBridges. The two-node fabric and two-node stretch configurations with FibreBridge also require them. Only the two-node configuration with SAS optical cables does not use FibreBridges, because the storage connects directly to SAS ports on the two controllers.

Last update: 2017-10-26 23:17

(NetApp Confidential - Limited Use) Nabil Fares | 01-05-2018 21:41

Requirements

Which FibreBridges are supported?

Starting in Data ONTAP 8.3.2 GA, the ATTO 7500N FibreBridge is supported and recommended for attaching NetApp FAS disk shelves. The ATTO 7500N provides improved performance and lower latency than the ATTO 6500N FibreBridge and is ideal for AFF MetroCluster deployments. In addition, the ATTO 7500N has dual-power supplies for redundancy and supports multiple storage stacks (or sub-stacks). A FibreBridge is not used for a MetroCluster configuration that uses solely array LUNs.

In Data ONTAP 8.3 and newer, the ATTO 6500N FibreBridge is available for attaching NetApp FAS shelves. A FibreBridge is not used for a MetroCluster configuration that uses solely array LUNs. Due to 6500N’s limited IOPs and higher latency it is not recommended for use with SSDs.

Last update: 2017-10-26 23:18

(NetApp Confidential - Limited Use) Nabil Fares | 01-05-2018 21:41

Requirements

Is SNMP supported for the FibreBridge?

No. SNMP is not supported on the ATTO 6500N or 7500N FibreBridge.

Last update: 2017-10-26 23:20

(NetApp Confidential - Limited Use) Nabil Fares | 01-05-2018 21:41

Requirements

Is the ATTO 6500N still supported and available for MetroCluster deployments?

Yes. The ATTO 6500N is supported as an option for MetroCluster configurations and is available as an add-on.

Last update: 2017-10-26 23:20

(NetApp Confidential - Limited Use) Nabil Fares | 01-05-2018 21:41

Requirements

What is the maximum number of disk shelves when using the ATTO 7500N?

The maximum number of disk shelves is the same for the ATTO 7500N and the ATTO 6500N. Both FibreBridges can support up to 10 shelves. In addition, the ATTO 7500N FibreBridges can support four stacks of disk shelves. The maximum number of shelves can vary depending on the disk configuration. See Table 9 for the maximum supported disk shelves.

Check the Hardware Universe and the Clustered Data ONTAP Maximum Configuration Guides for additional information.

Last update: 2017-10-26 23:21

(NetApp Confidential - Limited Use) Nabil Fares | 01-05-2018 21:41

Requirements

What are the disk shelf limits in an All Flash FAS (AFF) configuration when using the ATTO 7500N?

In an AFF configuration a maximum of four SSD disk shelves is supported. This provides 96 SSDs disk drives on each pair of ATTO 7500N FibreBridges. See Table 9 for more information.

Last update: 2017-10-26 23:21

(NetApp Confidential - Limited Use) Nabil Fares | 01-05-2018 21:41

Requirements

What are some of the key advantages of the ATTO 7500N compared to the ATTO 6500N?

The key advantages of the ATTO 7500N include:

- Dual power supply
- Increased throughput performance
- Reduced latency performance
- 2 x 16G FC ports: both can be enabled
- 4 x 12G SAS ports: all four can be enabled
- Support for four SSD disk shelves with 96 SSDs connected to a pair of ATTO 7500Ns
- Support for four disk shelf stacks connected to a pair of ATTO 7500Ns

Last update: 2017-10-26 23:23

(NetApp Confidential - Limited Use) Nabil Fares | 01-05-2018 21:41

Requirements

What is the maximum supported distance between sites in MetroCluster?

For fabric configurations in clustered Data ONTAP 8.3.2 and newer, the maximum distance is 185 miles (300 kilometers) when using the Brocade 6505 or 6510 FC switch. Other FC switches support a maximum distance up to 120 miles (200 kilometers). However, certain ISL speed and switch combinations support shorter distances. For the supported distances, see Table 3. For stretch direct-attached two-node configurations and bridge-attached two-node configurations using the ATTO 6500N, the maximum distance is 1,640 feet (500 meters). For stretch bridge-attached two-node configurations with the ATTO 7500N, the maximum distance is 885 feet (270 meters). To verify supported distances based on specific cabling configurations, see the IMT.

Switch Type	Protocol	ISL Speed (Gbps)	Distance	Max # of ISLs
Cisco 9148S	FC	4	80km	4
	FC	8	40km	4
	FC	16	20km	4
Cisco 9250i	FCIP	10	200km	1
Brocade 7840	FCIP	10	200km	1
Brocade 6505	FC	4	200km	1
	FC	8	300km	4
	FC	16	300km(200km)	2(4)
Brocade 6510	FC	4	300km	4

(NetApp Confidential - Limited Use) Nabil Fares | 01-05-2018 21:41

Requirements

	FC	8	300km		4
	FC	16	300km(200km)		2(4)
G620*	FC	4	300km	8	
	FC	8	300km	8	
	FC	16	300km	5	
	FC	32	300km	2	
∗G620 supports additional ISLs at various speeds with shorter distances than 300km, chec the IMT for supported combinations.					

Last update: 2017-11-02 16:03

(NetApp Confidential - Limited Use) Nabil Fares | 01-05-2018 21:41

Requirements

What is the minimum supported eight-node MetroCluster configuration?

The minimum supported eight-node MetroCluster configuration consists of:

- **Eight FAS, AFF or FlexArray controllers, with four-node clusters (HA pair) per site.** For supported controllers, see section 2.1. All four controllers at in a DR group must be exactly the same model and be either all FAS, AFF, all FAS with FlexArray controllers. In an eight-node configuration, the controllers do not have to be the same across DR groups. Example – 1 DR group can be AFF8080 while the other is FAS8080.
- **Local HA between the nodes (HA pair) at each site.** Local HA is used for NVRAM mirroring to the HA partner and enables local HA failover.
- **One dual-port 16Gb FC-VI card (X1928) per controller.** This connection provides NVRAM mirroring to the DR partner node. The 8Gb card (X1927) is not supported. The X1928 must be configured with 16Gb SFPs (the same as used for the 16Gb HBA X1143). The SFP part number is X6602A. If the cards are ordered as add-ons, the correct 16Gb SFP must be specified. See also the question How can I verify that the correct SFP is used for the 16Gb FC-VI connection? in section 2.1.
- **Four FC initiator ports (8Gb or 16Gb) per controller, consisting of two ports per fabric.** The ports can use the onboard/UTA ports or FC HBA ports, or a combination of both. For supported HBAs, see the IMT:
    - Only 8Gb or 16Gb ports are supported; the onboard ports on FAS3200 are 4Gb and are not supported.
    - Two ports on each controller must connect to each switch at the local site. The two ports connected to each switch should belong to different ASICs on the HBA or to different port pairs for the onboard ports.
    - All four ports must operate at the same speed. Therefore, if a mix of 8Gb and 16Gb ports are used, all ports must run at the highest common speed (8Gb in this case).
    - Only four initiator ports are required and supported for FAS disk shelves.
    - Additional ports are required when mixing FAS and array LUN disk shelves.
    - The Quote Tool selects X1143 as the default card for FC initiators with FAS8040 and higher. If you want to use the onboard UTA ports or 8Gb ports (X1132), you must select X1132 under the Adapter section.

Starting in Data ONTAP 8.3.1, **only** the FAS8020 can optionally be configured with two FC initiator ports per controller. This system has only one connection from each controller to each switch and can be applied to both 2-node, 4-node, and 8-node fabric MetroCluster configurations. All other platforms require four FC initiator ports. Figures 1 and 2 show the configuration for the FAS8020 in clustered Data ONTAP

(NetApp Confidential - Limited Use) Nabil Fares | 01-05-2018 21:41

Requirements

8.3.1.

Starting in Data ONTAP 8.3.2, **only** the FAS8020 and AFF8020 can optionally be configured to use the X1132A-EN-R6-C initiator card for both FC-VI and FC connectivity. This feature allows the MetroCluster infrastructure to connect by using a single initiator card. The use of this configuration provides a free PCIe slot on the controller, which can be used for NetApp Flash Cache™ caching or additional client ports. Figure 3 shows the port configuration for the FAS8020 in clustered Data ONTAP 8.3.2.

Note: The X1132A-EN-R6-C initiator card for both FC-VI and FC connectivity must be installed in slot 1 of the FAS8020 controller.

- **Two or four cluster interconnect 10GbE ports per controller.** Use the cluster interconnect ports as NetApp recommends in the Hardware Universe. Certain controller models default to four cluster interconnects but can optionally support two cluster interconnects. For information about the number of cluster interconnect ports required and recommended, see the SE technical presentation on the specific controller model that you have chosen.
- **Four cluster interconnect switches:** Four 10GbE cluster interconnect switches, two switches per site, are required.
- **Cluster management switches (customer supplied or ordered through NetApp).** The requirement is the same as for clustered Data ONTAP.
- **Two Ethernet ports (1Gb or 10Gb) per controller for the cluster peering network.** This network is used to replicate the cluster configuration between the sites by using intercluster logical interfaces (LIFs). The cluster peering network switches are customer supplied. The intercluster LIFs can be on ports, VLANs, or ifgroups as per the Clustered Data ONTAP Network Management Guide.
- **Four FC switches, two switches per site.** The switches must be dedicated to MetroCluster. The same switches can be used to connect to NetApp disks and array LUNs. For supported switches, see section 2.3.
- **Dedicated ISLs between the fabric switches.** The interswitch links must be dark fiber or xWDM as supported by the switch vendor. For more information, see section 2.3.
  Note: In the Data ONTAP 8.3.2 release, only one FCIP Ethernet port can be used for the ISL connection between the two FCIP switches.
- **Minimum of four FibreBridges, two per site.** Each storage stack requires two FibreBridges, and a minimum of one storage stack is required per site. Each additional storage stack requires two FibreBridges. Bridges are not required for MetroCluster configurations with array LUNs because the storage connects directly to the switches.
- **Minimum storage recommended for 4-node MetroCluster in production:** NetApp recommends eight SAS shelves or 192 disks **per site** (sixteen shelves total) to allow per-shelf disk assignment, or equivalent storage array disks (array LUNs). For supported storage, see section 2.2.
- **Minimum storage recommended for 2-node MetroCluster in**

(NetApp Confidential - Limited Use) Nabil Fares | 01-05-2018 21:41

production: NetApp recommends four SAS shelves or 96 disks **per site** (eight shelves total) to allow per-shelf disk assignment, or equivalent storage array disks (array LUNs).

Minimum supported storage for FAS: In an eight-node configuration, four shelves or 96 disks **per site** (eight shelves total) are the minimum supported storage.

Note: MetroCluster can be configured exclusively with array LUNs (including the root aggregates), exclusively with FAS disk shelves, or with a combination of both. If you deploy MetroCluster with both FAS disk shelves and array LUNs, NetApp recommends that you create the root aggregate or volumes on FAS disk shelves and use the array LUNs for data aggregates. With this configuration, the minimum FAS disk shelf requirement is four shelves, or two shelf per HA pair, with 96 drives total. This approach makes six drives available for each node’s root aggregate and spares, and the same number of disks for the mirror copy.

Note: With this configuration, shelves are shared between nodes. Therefore, disk assignment must be managed manually. This configuration may experience low capacity and performance due to limited disks. NetApp therefore does not recommend this configuration for production use without an understanding of the limitations.

Last update: 2017-11-02 16:13

(NetApp Confidential - Limited Use) Nabil Fares | 01-05-2018 21:41

Requirements

What is the minimum supported four-node MetroCluster configuration?

The minimum supported four-node MetroCluster configuration consists of:

- **Four FAS or FlexArray controllers, with a two-node cluster (HA pair) per site.** For supported controllers, see section 2.1. All four controllers in the DR group must be exactly the same model and be either all FAS, all FAS with FlexArray controllers. (You cannot mix and match FAS, FlexArray between the two sites.)
- **Local HA between the nodes (HA pair) at each site.** Local HA is used for NVRAM mirroring to the HA partner and enables local HA failover.
- **One dual-port 16Gb FC-VI card (X1928) per controller.** This connection provides NVRAM mirroring to the DR partner node. The 8Gb card (X1927) is not supported. The X1928 must be configured with 16Gb SFPs (the same as used for the 16Gb HBA X1143). The SFP part number is X6602A. If the cards are ordered as add-ons, the correct 16Gb SFP must be specified. See also the question How can I verify that the correct SFP is used for the 16Gb FC-VI connection? in section 2.1.
- **Four FC initiator ports (8Gb or 16Gb) per controller, consisting of two ports per fabric.** The ports can use the onboard/UTA ports or FC HBA ports, or a combination of both. For supported HBAs, see the IMT:
    - Only 8Gb or 16Gb ports are supported; the onboard ports on FAS3200 are 4Gb and are not supported.
    - Two ports on each controller must connect to each switch at the local site. The two ports connected to each switch should belong to different ASICs on the HBA or to different port pairs for the onboard ports.
    - All four ports must operate at the same speed. Therefore, if a mix of 8Gb and 16Gb ports are used, all ports must run at the highest common speed (8Gb in this case).
    - Only four initiator ports are required and supported for FAS disk shelves.
    - Additional ports are required when mixing FAS and array LUN disk shelves.
    - The Quote Tool selects X1143 as the default card for FC initiators with FAS8040 and higher. If you want to use the onboard UTA ports or 8Gb ports (X1132), you must select X1132 under the Adapter section.

Starting in Data ONTAP 8.3.1, **only** the FAS8020 can optionally be configured with two FC initiator ports per controller. This system has only one connection from each controller to each switch and can be applied to both 2-node and 4-node fabric MetroCluster configurations. All other platforms require four FC initiator ports.

FAS8020 configuration in clustered Data ONTAP 8.3.0

(NetApp Confidential - Limited Use) Nabil Fares | 01-05-2018 21:41

Requirements

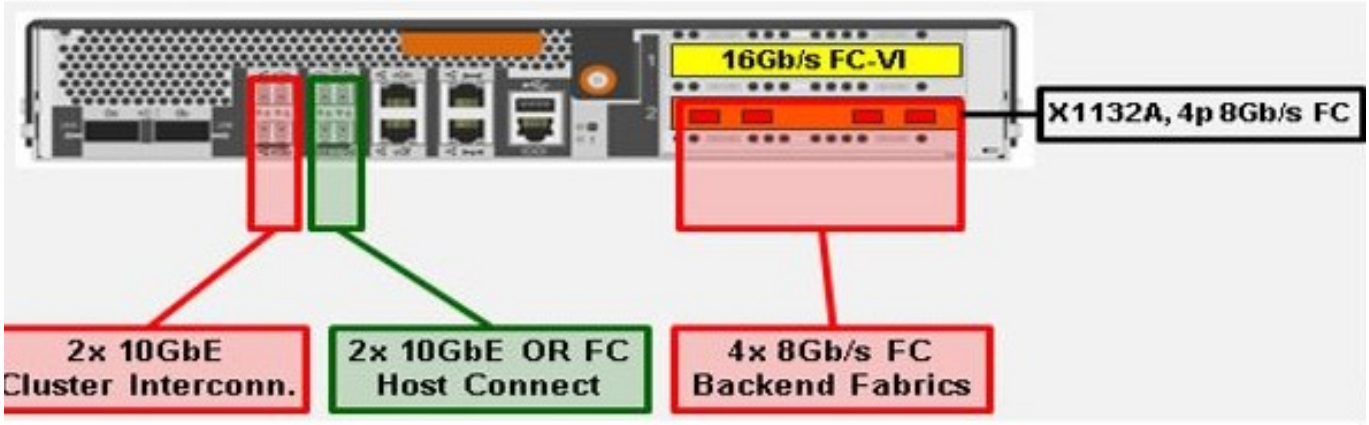

FAS8020 configuration in clustered Data ONTAP 8.3.1

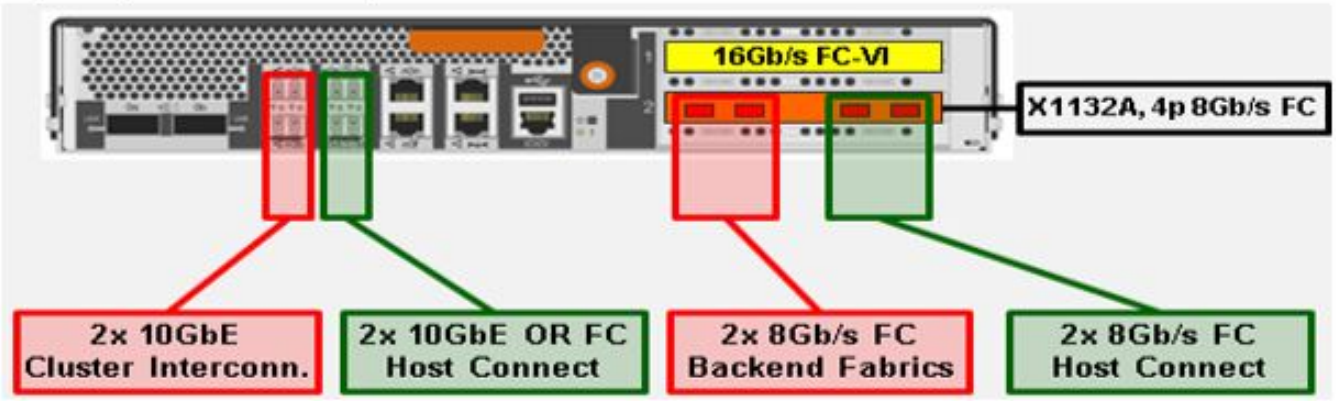

Starting in Data ONTAP 8.3.2, **only** the FAS8020 and AFF8020 can optionally be configured to use the X1132A-EN-R6-C initiator card for both FC-VI and FC connectivity. This feature allows the MetroCluster infrastructure to connect by using a single initiator card. The use of this configuration provides a free PCIe slot on the controller, which can be used for NetApp Flash Cache™ caching or additional client ports. Figure 3 shows the port configuration for the FAS8020 in clustered Data ONTAP 8.3.2.

FAS8020 configuration in clustered Data ONTAP 8.3.2

Requirements

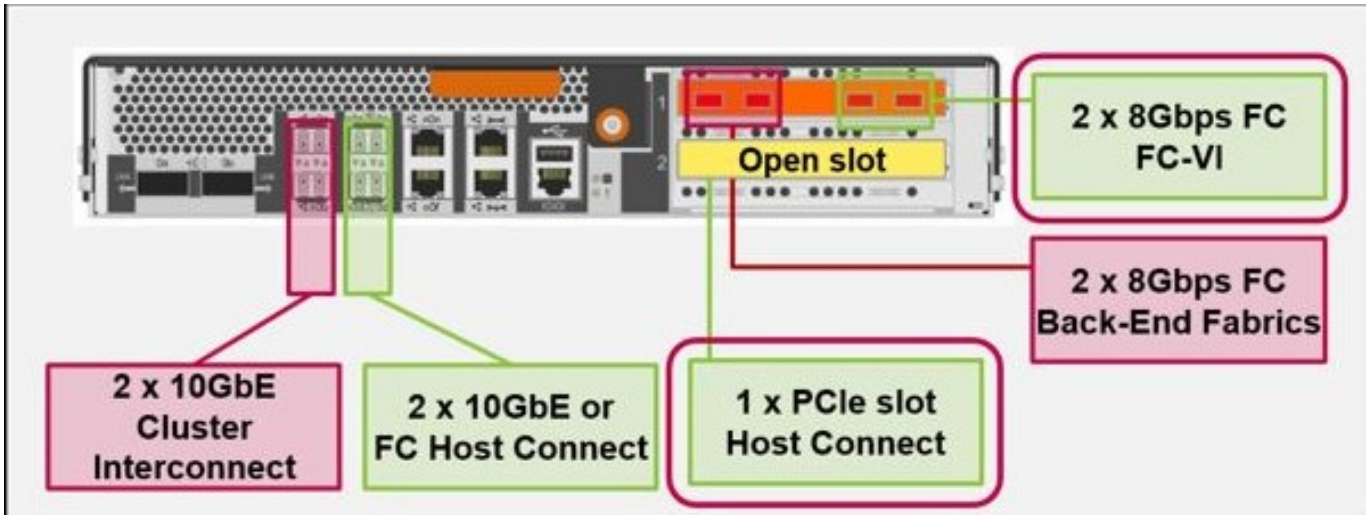

Note: The X1132A-EN-R6-C initiator card for both FC-VI and FC connectivity must be installed in slot 1 of the FAS8020 controller.

FAS8200 configuration in clustered Data ONTAP 9.1

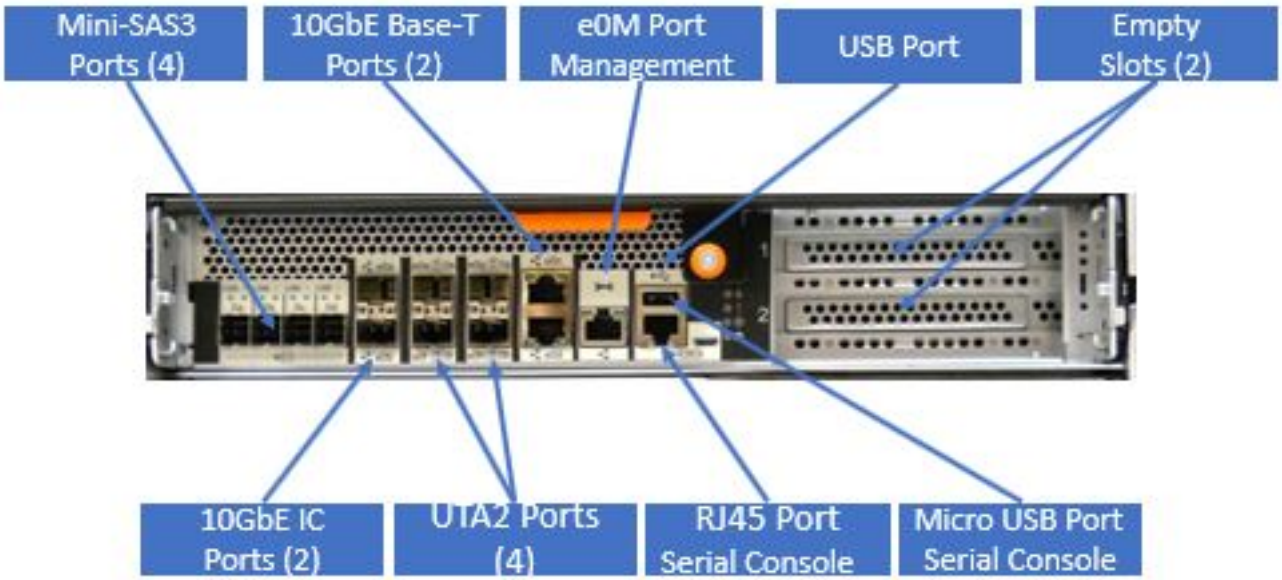

FAS9000 configuration in clustered Data ONTAP 9.1

(NetApp Confidential - Limited Use) Nabil Fares | 01-05-2018 21:41

Requirements

FAS9000 HA configuration in clustered Data ONTAP

A700 / FAS9000 4-node Fabric configurations have a distinct requirement. The switches need 14 ports: 4 FCVI from HA pair to switch, 4 HBA from HA pair to switch, 2 for ATTO, 4 for ISL. This forces the need to get either additional 12 port license (Cisco 9148S or Brocade 6505) or buy the Brocade 6510 24 port FC switch. Given that customers can’t intermix their FC switches between Brocade/Cisco, this could be an issue. So the number of licensed ports on the switches need to be accounted for while quoting for the system.

Requirements

- **Two or four cluster interconnect 10GbE ports per controller.** Use the cluster interconnect ports as NetApp recommends in the Hardware Universe. Certain controller models default to four cluster interconnects but can optionally support two cluster interconnects. For information about the number of cluster interconnect ports required and recommended, see the SE technical presentation on the specific controller model that you have chosen.
- **Optional:** An option is to use four 10GbE cluster interconnect switches, two switches per site. If a two-node switchless cluster is configured, these switches are not required.
- **Cluster management switches (customer supplied or ordered through NetApp).** The requirement is the same as for clustered Data ONTAP.
- **Two Ethernet ports (1Gb or 10Gb) per controller for the cluster peering network.** This network is used to replicate the cluster configuration between the sites by using intercluster logical interfaces (LIFs). The cluster peering network switches are customer supplied. The intercluster LIFs can be on ports, VLANs, or ifgroups as per the Clustered Data ONTAP Network Management Guide.
- **Four FC switches, two switches per site.** The switches must be dedicated to MetroCluster. The same switches can be used to connect to NetApp disks and array LUNs. For supported switches, see IMT.
- **Dedicated ISLs between the fabric switches.** The interswitch links must be dark fiber or xWDM as supported by the switch vendor. For more information, see section 2.3.

  Note: In the Data ONTAP 8.3.2 release, only one FCIP Ethernet port can be used for the ISL connection between the two FCIP switches.
- **Four FibreBridges, two per site.** Each storage stack requires two FibreBridges, and a minimum of one storage stack is required per site. Each additional storage stack requires two FibreBridges. Between a pair of 7500N you can have multiple stacks (or sub-stacks). Bridges are not required for MetroCluster configurations with array LUNs because the storage connects directly to the switches.
- **Minimum storage recommended for production:** NetApp recommends four SAS shelves or 96 disks **per site** (eight shelves total) to allow per-shelf disk assignment, or equivalent storage array disks (array LUNs) (for 4-node/8-node MetroCluster). For 2-node, the recommended is two shelves per site. For supported storage, see section 2.2.
- **Minimum supported storage for FAS:** In a four-node configuration, two shelves or 48 disks **per site** (four shelves total) are the minimum supported storage. In a two-node configuration, one shelf or 24 disks **per site** (two shelves total) are the minimum supported storage. With this configuration, shelves are shared between nodes. Therefore, disk assignment must be managed manually. This configuration may experience low capacity and performance due to limited disks. NetApp therefore does not recommend this configuration for production use without an understanding of the limitations.

  Note: MetroCluster can be configured exclusively with array LUNs (including the root aggregates), exclusively with FAS disk shelves, or with a

(NetApp Confidential - Limited Use) Nabil Fares | 01-05-2018 21:41

combination of both. If you deploy MetroCluster with both FAS disk shelves and array LUNs, NetApp recommends that you create the root aggregate or volumes on FAS disk shelves and use the array LUNs for data aggregates. With this configuration, the minimum FAS disk shelf requirement is two shelves, or one shelf per site, with 48 drives total. This approach makes six drives available for each node’s root aggregate and spares, and the same number of disks for the mirror copy.

Last update: 2017-11-02 18:32

(NetApp Confidential - Limited Use) Nabil Fares | 01-05-2018 21:41

Requirements

What is the minimum supported two-node stretch MetroCluster configuration in Data ONTAP?

All two-node configurations must have the following items (depending on the specific topology that you choose, additional hardware is required as described in the following questions):

- **Two FAS or FlexArray controllers, with a single-node cluster per site.** For supported controllers, see section 2.1. Both controllers must be exactly the same model and be either AFF, all FAS, all FAS with FlexArray, or all FlexArray controllers (you cannot mix and match FAS, FlexArray between the two sites). Because these are single-node clusters, no cluster interconnect ports or switches are required.
- **One dual-port 16Gb FC-VI card (X1928) per controller.** This connection provides NVRAM mirroring to the DR partner node. The 8Gb card (X1927) is not supported. The X1928 must be configured with 16Gb SFPs (the same as used for the 16Gb HBA X1143). The SFP part number is X6602A. If the cards are ordered as add-ons, the correct 16Gb SFP must be specified. See also question How can I verify that the correct SFP is used for the 16Gb FC-VI connection? in section 2.1.
- **Cluster management switches (customer supplied or ordered through NetApp).** Same requirement as for clustered Data ONTAP.
- **Two Ethernet ports (1Gb or 10Gb) per controller for the cluster peering network.** This network is used to replicate the cluster configuration between the sites, using intercluster LIFs. The cluster peering network switches are customer supplied. The intercluster LIFs can be on ports, VLANs, or ifgroups as per the Clustered Data ONTAP Network Management Guide.
- **Minimum storage recommended for production:** NetApp recommends two SAS shelves or 48 disks **per site** (four shelves total) to allow per-shelf disk assignment, or equivalent storage array disks (array LUNs). For supported storage, see section 2.2.
- **Minimum supported storage for FAS:** In a two-node configuration, one SAS shelf or 24 disks **per site** (two shelves total) are the minimum supported storage. With this configuration, shelves are shared between nodes. Therefore, disk assignment must be managed manually. This configuration may experience low capacity and performance due to limited disks. NetApp therefore does not recommend this configuration for production use without an understanding of the limitations.
  Note: MetroCluster can be configured exclusively with array LUNs (including the root aggregates), exclusively with FAS disk shelves, or with a combination of both. If you deploy MetroCluster with both FAS disk shelves and array LUNs, NetApp recommends that you create the root aggregate or volumes on FAS disk shelves and use the array LUNs for data aggregates. With this configuration, the minimum FAS disk shelf requirement is two shelves, or one shelf per site, with 48 drives total. This approach makes six drives available for each node’s root aggregate and spares, and the same

(NetApp Confidential - Limited Use) Nabil Fares | 01-05-2018 21:41

number of disks for the mirror copy.

Last update: 2017-11-02 19:10

(NetApp Confidential - Limited Use) Nabil Fares | 01-05-2018 21:41

Requirements

What is required for the two-node fabric MetroCluster configuration in clustered Data ONTAP?

- **Four FC initiator ports (8Gb or 16Gb) per controller, consisting of two ports per fabric.** The ports can use the onboard/UTA ports or FC HBA ports, or a combination of both. For supported HBAs, see the IMT:
    - Only 8Gb or 16Gb ports are supported. The onboard ports on FAS3200 are 4Gb and are not supported.
    - Two ports on each controller must connect to each switch at the local site. The two ports connected to each switch should belong to different ASICs on the HBA or to different port pairs for the onboard ports
    - All four ports must operate at the same speed. Therefore, if a mix of 8Gb and 16Gb ports are used, all ports must run at the highest common speed (8Gb in this case).
    - Only four initiator ports are required and supported for FAS disk shelves.
    - Additional ports are required when mixing FAS and array LUN disk shelves.
    - The Quote Tool selects X1143 as the default card for FC initiators with FAS8040 and higher. If you want to use the onboard UTA ports or 8Gb ports (X1132), you must select X1132 under the Adapter section.

Starting in Data ONTAP 8.3.1, **only** the FAS8020 can optionally be configured with two FC initiator ports per controller. This system has only one connection from each controller to each switch. All other platforms require four FC initiator ports.

Starting in Data ONTAP 8.3.2, **only** the FAS8020 and the AFF8020 can optionally be configured to use the X1132A-EN-R6-C initiator card for both FC-VI and FC connectivity. This feature allows the MetroCluster infrastructure to connect by using a single initiator card. The use of this configuration provides a free PCIe slot on the controller, which can be used for Flash Cache or additional client ports.

For newer platforms (8200, 9000), please refer to the blue book.

- **Dedicated ISLs between the fabric switches.** The ISLs must be dark fiber or xWDM as supported by the switch vendor. For more information, see section 2.3.
- **Four FibreBridges, two per site.** Each storage stack requires two FibreBridges, and a minimum of one storage stack is required per site. Each additional storage stack requires two FibreBridges. Bridges are not required for MetroCluster configurations with array LUNs because the storage connects directly to the switches.

Requirements

What is required for the two-node configuration with FibreBridges?

- **Four FC initiator ports (8Gb or 16Gb) per controller, consisting of two ports per fabric.** The ports can use the onboard/UTA ports or FC HBA ports, or a combination of both. For supported HBAs, see the IMT:
    - Only 8Gb or 16Gb ports are supported. The onboard ports on FAS3200 are 4Gb and are not supported.
    - Two ports on each controller must connect to each switch at the local site. The two ports connected to each switch should belong to different ASICs on the HBA or to different port pairs for the onboard ports.
    - All four ports must operate at the same speed. Therefore, if a mix of 8Gb and 16Gb ports are used, all ports must run at the highest common speed (8Gb in this case).
    - Only four initiator ports are required and supported for FAS disk shelves.
    - Additional ports are required when mixing FAS and array LUN disk shelves.
    - The Quote Tool selects X1143 as the default card for FC initiators with FAS8040 and higher. If you want to use the onboard UTA ports or 8Gb ports (X1132), you must select X1132 under the Adapter section.
- **Four FibreBridges, two per site.** Each storage stack requires two FibreBridges, and a minimum of one storage stack is required per site. Each additional storage stack requires two FibreBridges. Bridges are not required for MetroCluster configurations with array LUNs because the storage connects directly to the switches.

Last update: 2017-11-02 19:36

(NetApp Confidential - Limited Use) Nabil Fares | 01-05-2018 21:41

Requirements

What is required for the two-node configuration with optical SAS cables?

- Four SAS ports per controller.
- Optical SAS or regular SAS cables. Regular SAS cables can be used for local storage connections; optical SAS should be used for remote storage connections.

Last update: 2017-11-02 19:36

(NetApp Confidential - Limited Use) Nabil Fares | 01-05-2018 21:41

Requirements

How many target FC ports are required when deploying AFF-series controllers in a two-node or four-node MetroCluster configuration?

When deploying MetroCluster on AFF-series controllers, the best practice is to use two target FC ports for optimal performance.

Last update: 2017-11-02 19:37

(NetApp Confidential - Limited Use) Nabil Fares | 01-05-2018 21:41

Requirements

What does the cabling and architecture look like in the four-node configuration?

The diagram below shows a four-node MetroCluster configuration with NetApp FAS shelves. If additional storage is required, additional shelves and FibreBridges are also supported.

Four-node MetroCluster configuration with FAS shelves.

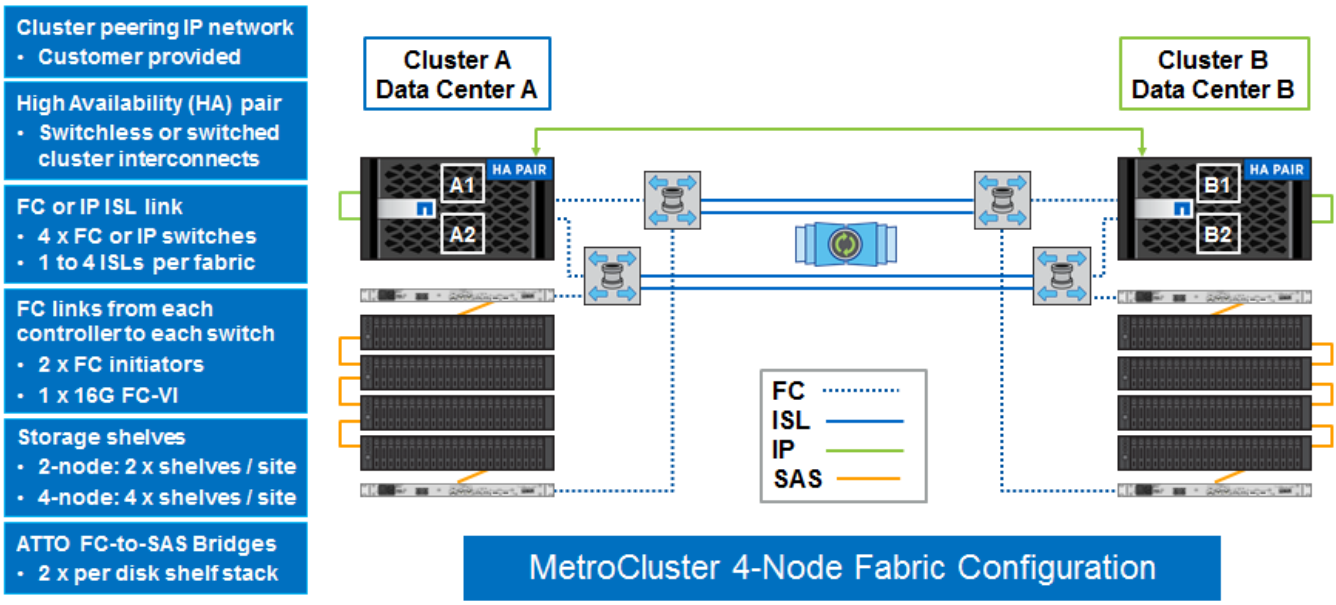

Last update: 2017-11-02 19:39

Requirements

What does the cabling and architecture look like in the eight-node configuration?

The diagram below shows an eight-node MetroCluster configuration with NetApp disk shelves. If more storage is required, additional shelves and FibreBridges are also supported.

Eight-node MetroCluster configuration.

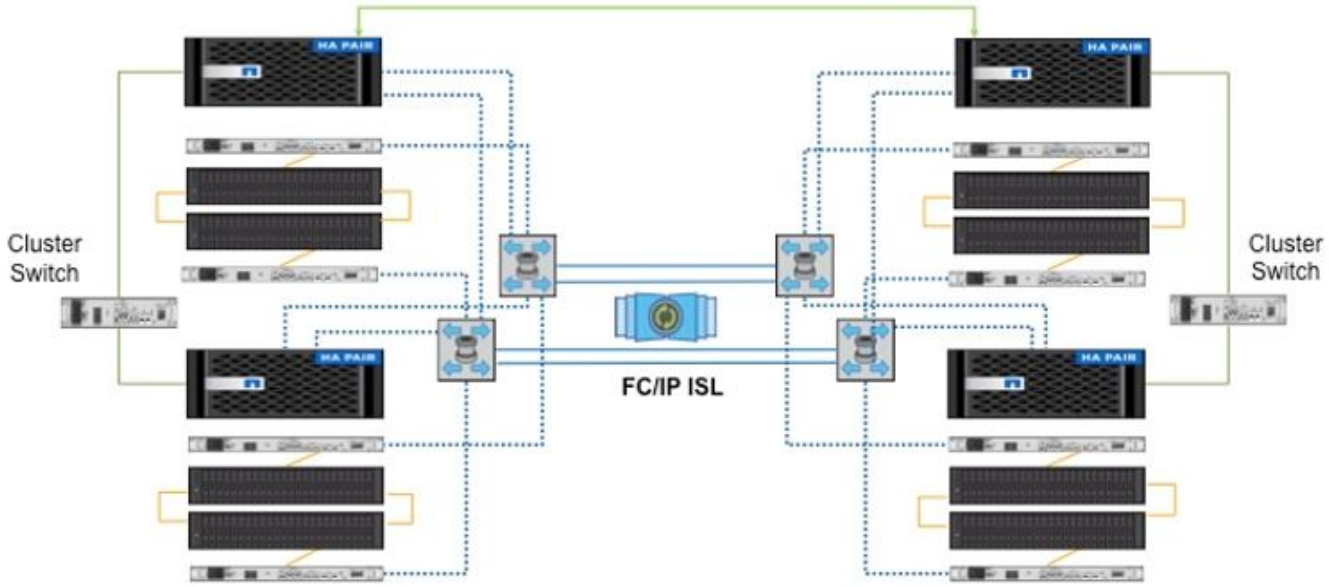

Last update: 2017-11-02 19:45

(NetApp Confidential - Limited Use) Nabil Fares | 01-05-2018 21:41

Requirements

What two-node configurations are available in Data ONTAP 8.3.1 or later?

There are three possibilities for a two-node configuration. As stated earlier, NetApp recommends two shelves as the minimum storage configuration per site. Figure 9 through Figure 11 show optional additional shelves.

- **Two-node fabric configuration.** This configuration is similar to the four-node architecture in Figure 4, except that there is only one node at each site, and there is no cluster interconnect.

Two-node fabric configuration.

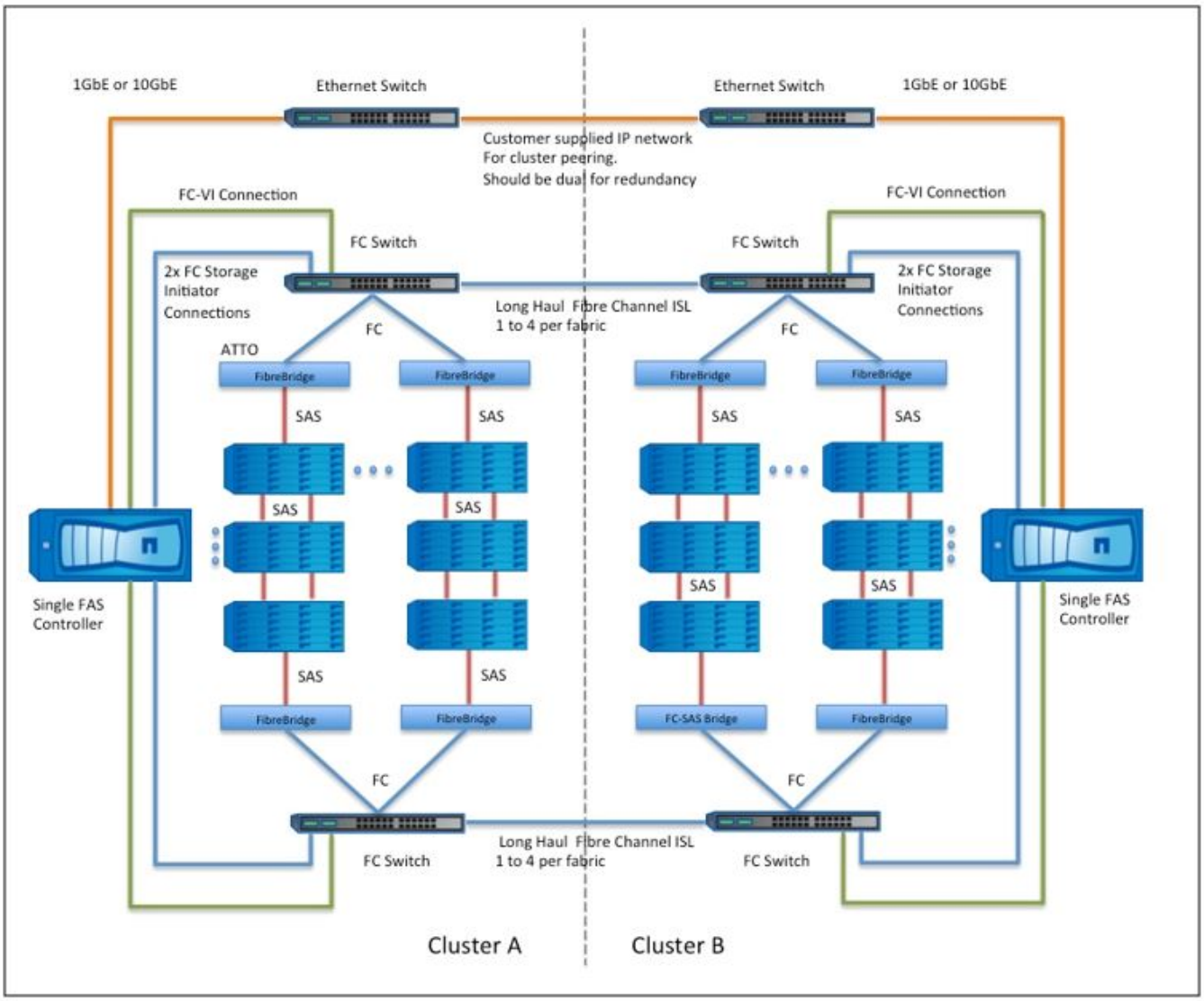

- **Two-node FibreBridge stretch configuration.** Storage is attached by using FibreBridges directly to FC initiator ports on each node. The FC-VI connection is a direct node-to-node connection.

Two-node FibreBridge stretch configuration

(NetApp Confidential - Limited Use) Nabil Fares | 01-05-2018 21:41

Requirements

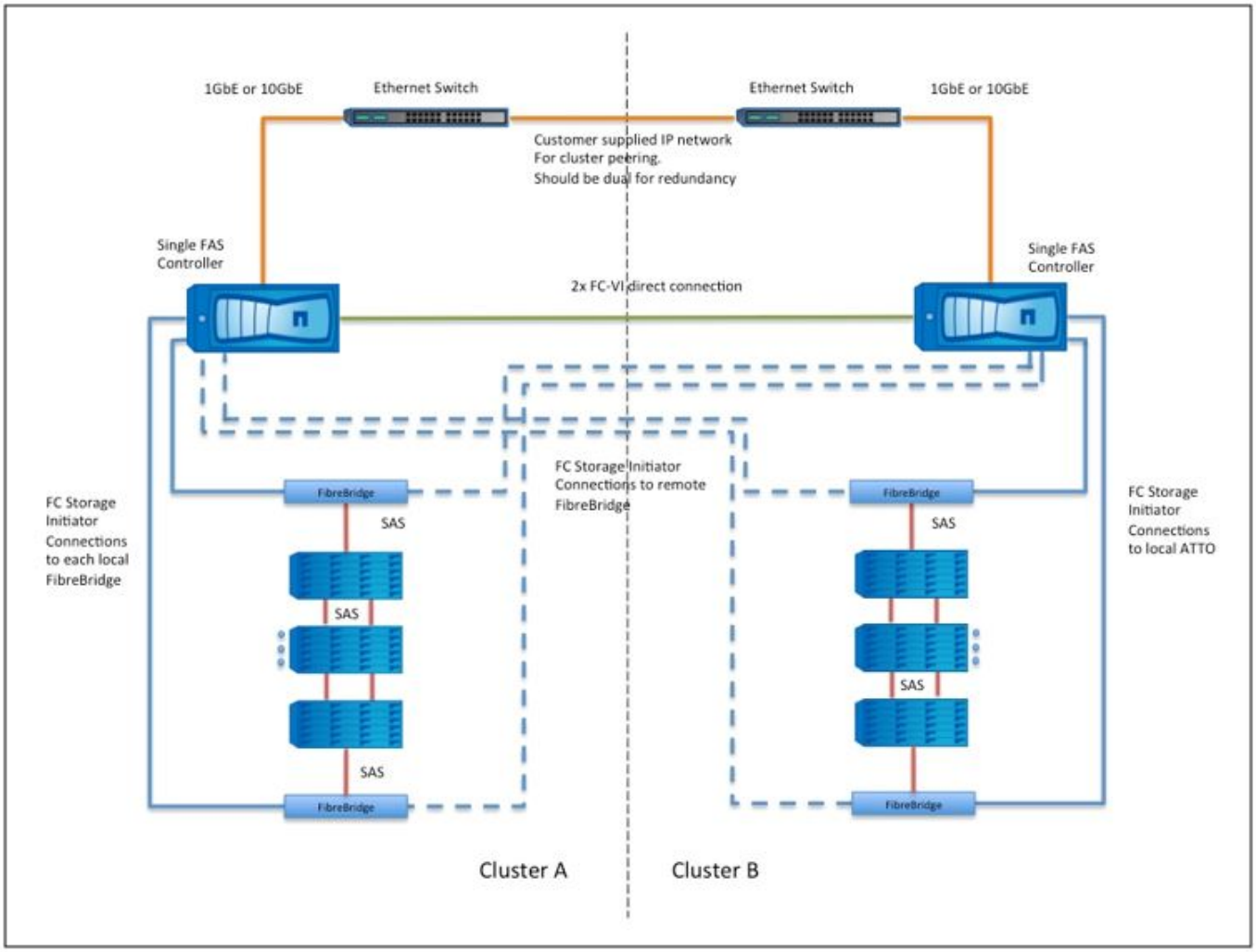

- **Two-node optical SAS stretch configuration.** Storage is attached by using SAS (normal or optical) cables to SAS ports on each node. Direct SAS connections or patch panels can be used.

Two-node optical SAS stretch configuration.

(NetApp Confidential - Limited Use) Nabil Fares | 01-05-2018 21:41

Requirements

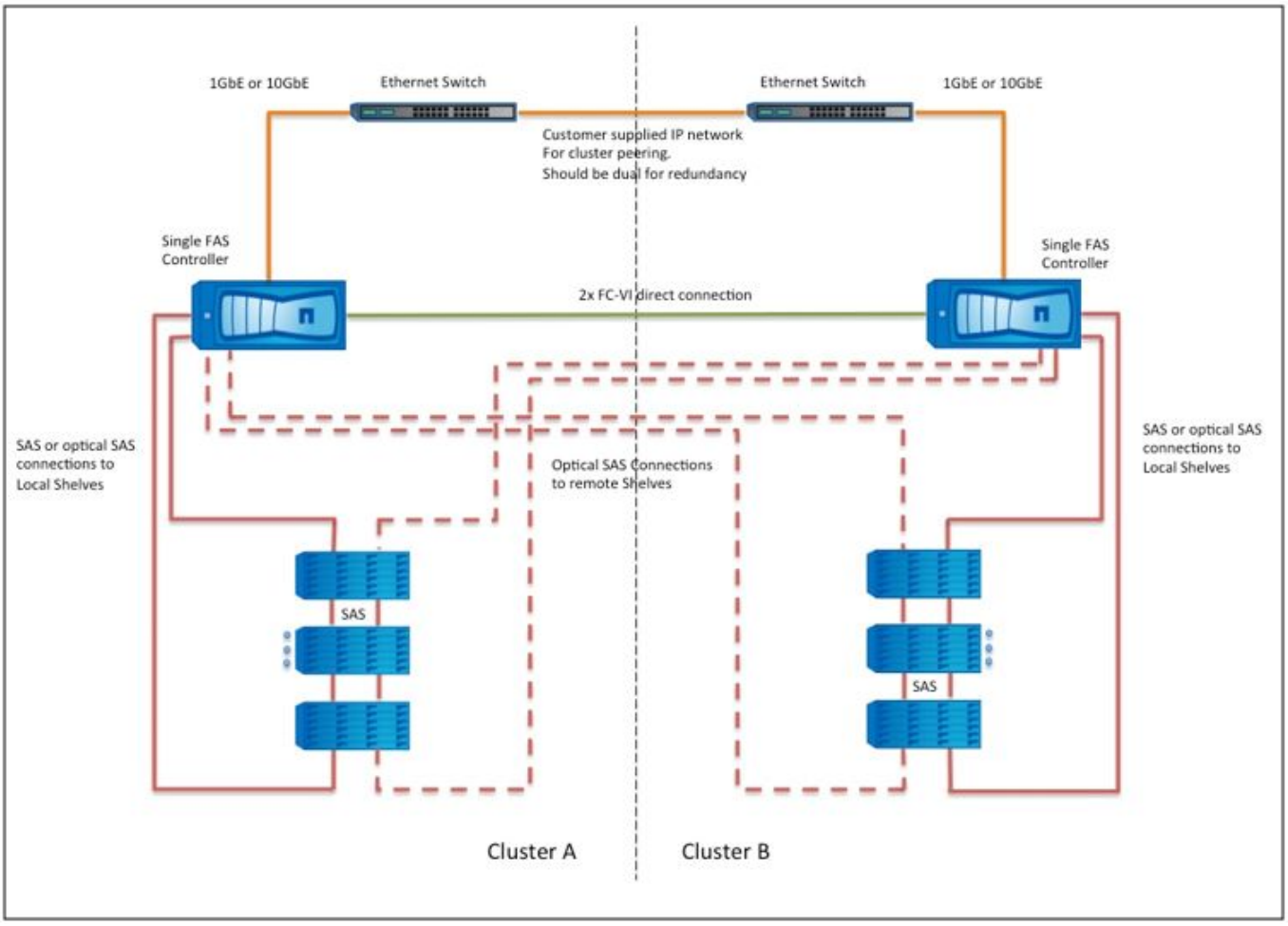

Last update: 2017-11-02 19:49

(NetApp Confidential - Limited Use) Nabil Fares | 01-05-2018 21:41

Requirements

How does the MetroCluster FCIP configuration differ from the FC configuration?

The cabling configuration remains the same. The only difference is that the FC fiber switches are replaced with the FCIP switches and an IP ISL. Only the Cisco 9250i is supported for FCIP ISL connectivity with the Data ONTAP 8.3.2 release. The FCIP configuration requires a dedicated IP network for the IP ISL and may be directly attached. The latency across the IP ISL network must be less than 2ms.

Starting from ONTAP 9.1, you can also use Brocade 7840 for FCIP.

MetroCluster FCIP configuration in clustered Data ONTAP 8.3.2 and ONTAP 9.0

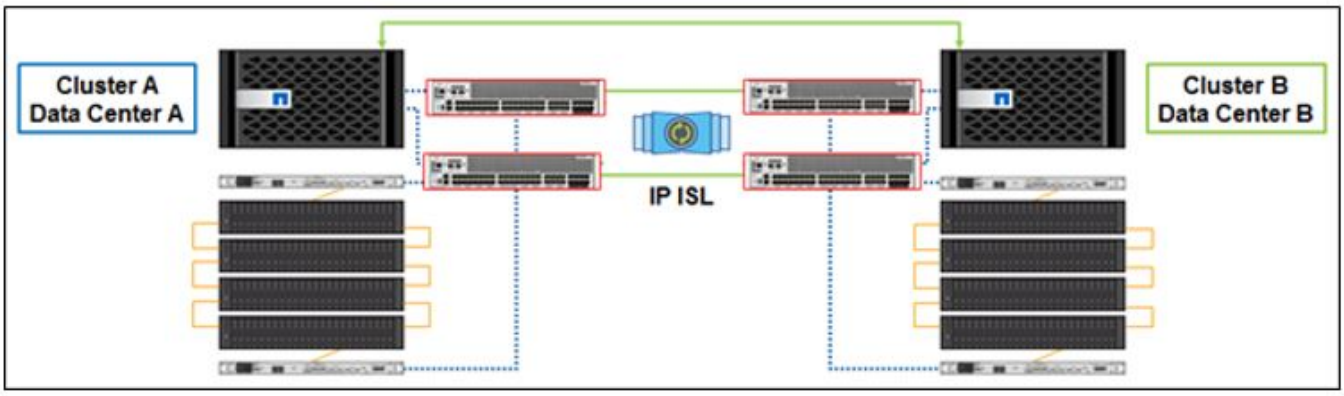

Last update: 2017-11-02 20:14

(NetApp Confidential - Limited Use) Nabil Fares | 01-05-2018 21:41

Requirements

Which are the supported configurations of the FAS controllers?

All the Controller nodes in an individual four-node or two-node MetroCluster or a single DR group in an eight-node FMC have to be the same platform model
In four-node FMC both controllers in a CC (Ctlr, Ctlr) must belong to the same DR group

In a two-node FMC or SMC, only controllers in a CI (Ctlr, IOXM) and CB (Ctlr, Blank) configurations are supported. Controllers in a CC (Ctlr, Ctlr) are not supported for a two-node MetroCluster.

For eight-node FMC each of the two DR groups should have the same four controllers. But the controllers can be different between the two DR groups as long as all eight controllers are supported for MetroCluster. See IMT for controllers supported for MetroCluster.

Follow the general cDOT Storage Platform Mixing Rules to determine which two controller models can be in the four-node cDOT cluster at each site. See:

https://library.netapp.com/ecm/ecm_get_file/ECMP1644424

The following controllers are supported for SMC and FMC with the restrictions noted above:

Controller/ONTAP Release	8.3	8.3.1+
FAS2xxx	No	No
FAS3210, FAS3240, FAS3270	No	No
FAS60xx	No	No
FAS3220	CC, CI, CB	CC, CI, CI
FAS3250	CI	CI
FAS6210	CC, CB	CC, CB
FAS6240	CI	CI
FAS6280	CI	CI
FAS6220	CC, CB	CC, CB
FAS6250	CI	CI
FAS6290	CI	CI

(NetApp Confidential - Limited Use) Nabil Fares | 01-05-2018 21:41

Requirements

FAS8020	CC, CB	CC, CB
FAS8040	CC	CC
FAS8060	CC	CC, CI
FAS8080	CI	CC, CI
FAS8200 / AFF300	No	No
FAS9000 / AFF700	No	No

Last update: 2017-11-02 20:39

(NetApp Confidential - Limited Use) Nabil Fares | 01-05-2018 21:41

Requirements

How many target and initiator ports are required in a MetroCluster configuration with array LUNs?

Each storage array requires exactly eight target ports, and each FlexArray or FAS controller requires four FC initiator ports to attach the arrays, as shown in Figure 13. For each additional array, two more FC initiators ports would be required. Note that a maximum of 256 LUNs can be provisioned to each initiator port. If a number of LUNs is greater than 256, an additional FC initiator and additional target ports are required. The two ports to each fabric should belong to different ASICs on the HBA (for example, 0a and 0c to the first fabric and 0b and 0d to the second fabric). Note that the switch ports that are used in Figure 13 are a sample only, they do not represent the standard configuration.

Example of switch port assignments in a MetroCluster configuration with array LUNs.

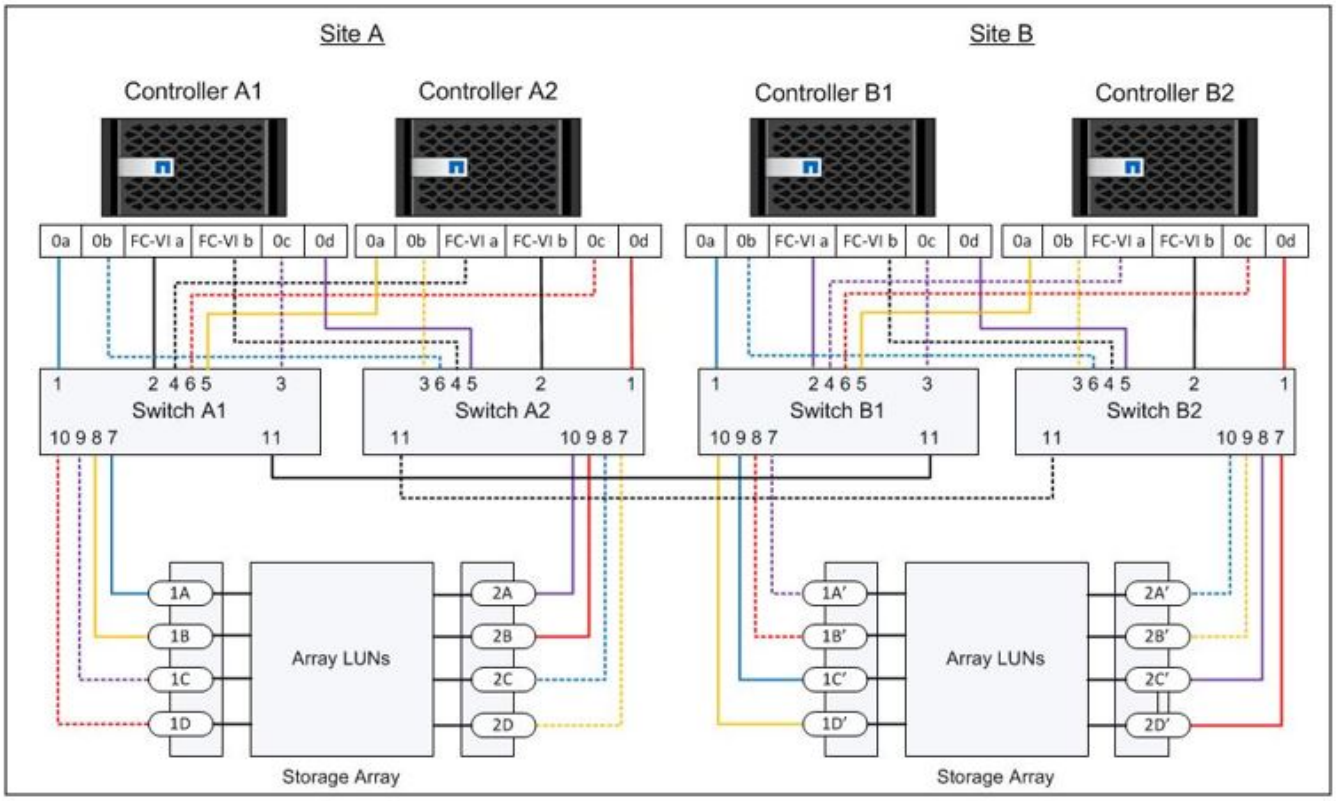

If both FAS disk shelves (with FibreBridge) and array LUNs are used, separate initiator ports are required for each type of storage. This requirement means that two sets of four FC initiator ports are required on each FAS or FlexArray controller, or eight ports total. For cabling and zoning information, see the product documentation. The same back-end FC switches are used for the two storage types, and separate ports are used for each storage connection type.

Last update: 2017-11-02 20:41

(NetApp Confidential - Limited Use) Nabil Fares | 01-05-2018 21:41

Requirements

Which storage shelves are supported?

Always consult the IMT for supported controllers. At the time of this writing, SAS shelves DS2246, DS4243, and DS4246 are being supported. DS4486 and DS14 shelves are not supported. SAS, SATA, and SSD drives are supported. All NetApp FAS disk shelves require a FibreBridge connection, except for the two-node Stretched MetroCluster. For information about the composition of the storage stacks, see section 2.2.

Third-party arrays and E-Series storage arrays are supported with MetroCluster configurations, and FibreBridges are not used for array attachment. MetroCluster configurations with array LUNs must be identical at both sites.

Note: ACP (alternate control path) is not supported with MetroCluster.
Note: Mini-SAS cables do provide Glowworm support with some NetApp storage shelves. Check the IMT for updates to the supported disk shelves.

MCC	FAS8000						FA
DS212C*	Yes	Yes	Yes	Yes	Yes	Yes	
DS224C	Yes	Yes	Yes	Yes	Yes	Yes	
DS460C**	Yes	Yes	Yes	Yes	Yes	Yes	
DS2246	Yes	Yes	Yes	Yes	Yes	Yes	
DS4246	Yes	Yes	Yes	Yes	Yes	Yes	
DS4486							

(NetApp Confidential - Limited Use) Nabil Fares | 01-05-2018 21:41

Requirements

*** DS212C is supported, not orderable at the factory but as an add-on in quote tool (as of March 2017).** **** DS460C is only supported on 9.2.**							

Shelves with IOM12 and IOM6 must be configured on different stacks no mixing of the two IOM types in the same stack is allowed. When there aren’t enough SAS ports to separate, say, DS2246 and DS224C shelves on separate stacks, the solution is to replace the IOM6 modules in the DS2246 with IOM12. After the IOM upgrade, the shelves can share a stack because all have IOM12.

Also, the shelves with IOM12 are supported to be connected to 6Gb SAS ports.

Last update: 2017-11-02 20:52

(NetApp Confidential - Limited Use) Nabil Fares | 01-05-2018 21:41

Requirements

What is the recommended way to assign the IDs to the shelves?

Shelf IDs should be unique within the DR group. Table 4 shows the numbering schema that NetApp recommends. For numbering in a two-node configuration, simply omit the A2 and B2 shelves and use the same A1 and B1 ranges. This approach allows a smooth conversion to a four-node or eight-node architecture.

Shelf ID Site A	Usage	Shelf ID Site B	Usag
Shelves 10 to 19	A1:Pool0	Shelves 20 to 29	A1:Pool1
Shelves 30 to 39	A2:Pool0	Shelves 40 to 49	A2:Pool1
Shelves 60 to 69	B1:Pool1	Shelves 50 to 59	B1:Pool0
Shelves 80 to 89	B2:Pool1	Shelves 70 to 79	B2:Pool0

Last update: 2017-11-02 20:57

Requirements

How many disks and shelves are required?

- **Four-node minimum storage recommended for production:** NetApp recommends four SAS shelves or 96 disks, or the equivalent storage array disks (array LUNs), **per site** (eight shelves total). With four FAS shelves per site, each pool (local and remote for each node) has its own shelf, and the disks can be assigned on a per-shelf basis to each node. Future disk expansions should be planned so that the pool-shelf isolation is preserved.

  The diagram below shows the pool-to-shelf assignment with four shelves per site, using the shelf IDs that NetApp recommends. Separation of pools on a per-shelf basis is not enforced. Software disk ownership allows disks to be assigned any way across the shelves. In some configurations with SSD, sharing pools on the same shelf is the preferred solution for performance reasons, by positioning SSD-only shelves at the top or the bottom of the stack. Having multiple nodes owning disks on the same shelves does disable per-shelf disk assignment and also increases the scope of impact if a shelf fails.

Pool-to-shelf assignment, four shelves per site.

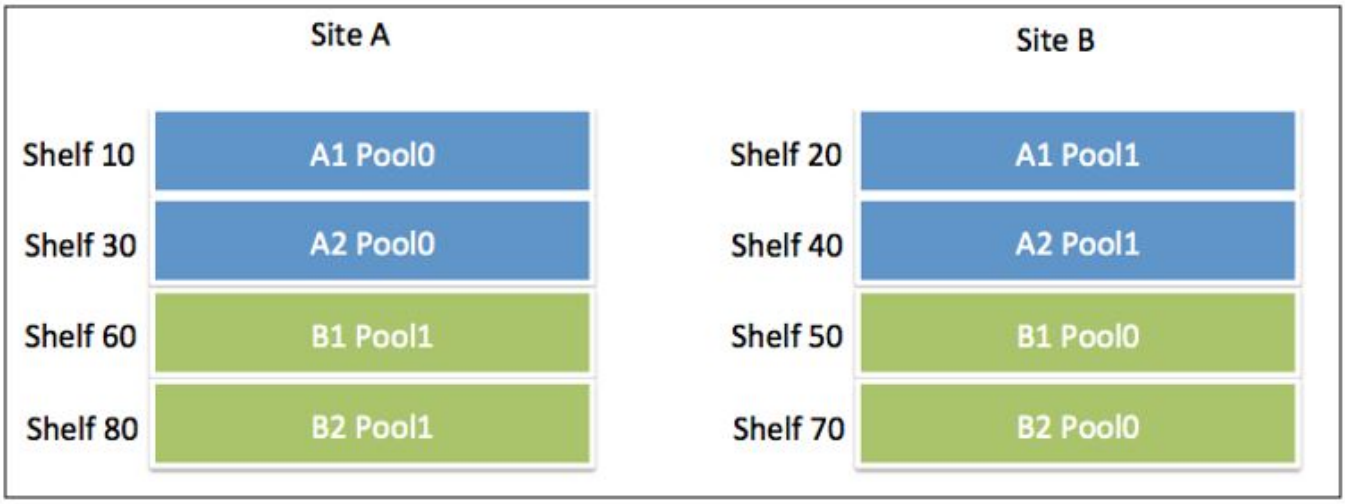

- **Four-node minimum supported storage for NetApp shelves:** Two SAS shelves or 48 disks **per site** (four shelves total) are the minimum supported storage. In this configuration, each shelf contains disks from two different pools for different nodes. Because each shelf is shared between two nodes, manual disk ownership is required, rather than automatic per-shelf disk assignment. Any replaced failed disks must also be manually assigned to make them visible to the appropriate node. This requirement makes disk management more complex.
  The diagram below shows a layout of pool-to-shelf assignment with only two shelves per site. Note the limited number of disks available: 12 disks for each node. Each of the four MetroCluster nodes requires a dedicated root

(NetApp Confidential - Limited Use) Nabil Fares | 01-05-2018 21:41

aggregate and a minimum of one mirrored data aggregate before running the metrocluster configure command. This layout has two or three drives used by the root aggregate (RAID 4 or NetApp RAID DP® technology) and one spare drive per pool. Therefore, either 7 + 2 or 6 + 2 drives remain for the data aggregate, which is very limited for capacity and performance. **NetApp does not recommend this configuration for production use.**

Layout **of pool-to-shelf assignment, two shelves per site.**

- **Two-node minimum storage recommended for production:** NetApp recommends two SAS shelves or 48 disks, or the equivalent storage array disks (array LUNs), **per site** (four shelves total). With two FAS shelves per site, each pool (local and remote for each node) has its own shelf, and the disks can be assigned on a per-shelf basis to each node. Future disk expansions should be planned so that the pool-shelf isolation is preserved.
- **Two-node minimum supported storage for NetApp shelves:** One SAS shelf or 24 disks **per site** (two shelves total) are the minimum supported storage. In this configuration, each shelf contains disks from two different pools for different nodes. Because each shelf is shared between two nodes, manual disk ownership is required, rather than automatic per-shelf disk assignment. Any replaced failed disks must also be manually assigned to make them visible to the appropriate node. This requirement makes disk management more complex.

Last update: 2017-11-02 21:02

Requirements

What is the maximum spindle count for MetroCluster?

The spindle count for all MetroCluster configurations is the same as for an HA pair of the same controller type, as documented in the Hardware Universe. For example, consider a FAS8080 EX that supports 1,440 disks in an HA pair. In MetroCluster, up to 720 disks could be installed on each site, making a total of 1,440 disks for the DR group, allocated across all the local and remote plexes. For eight-node MetroCluster configurations, the above 1,440 disks are limits for one DR group. site – for the entire eight-node configuration, it is 2,880 disks. The disks can be assigned asymmetrically between the two clusters. For example, if one cluster needs 500 drives to support its workload, a maximum of 220 drives is available for the other cluster's workload. Figure 16 shows this disk assignment. Note that the **total number** of drives physically present at each site is the same because all data is mirrored. Figure 16 shows a four-node configuration. For a two-node configuration, the disk limit is the same: in this case, 720 drives across the two nodes.

Disk drive considerations.

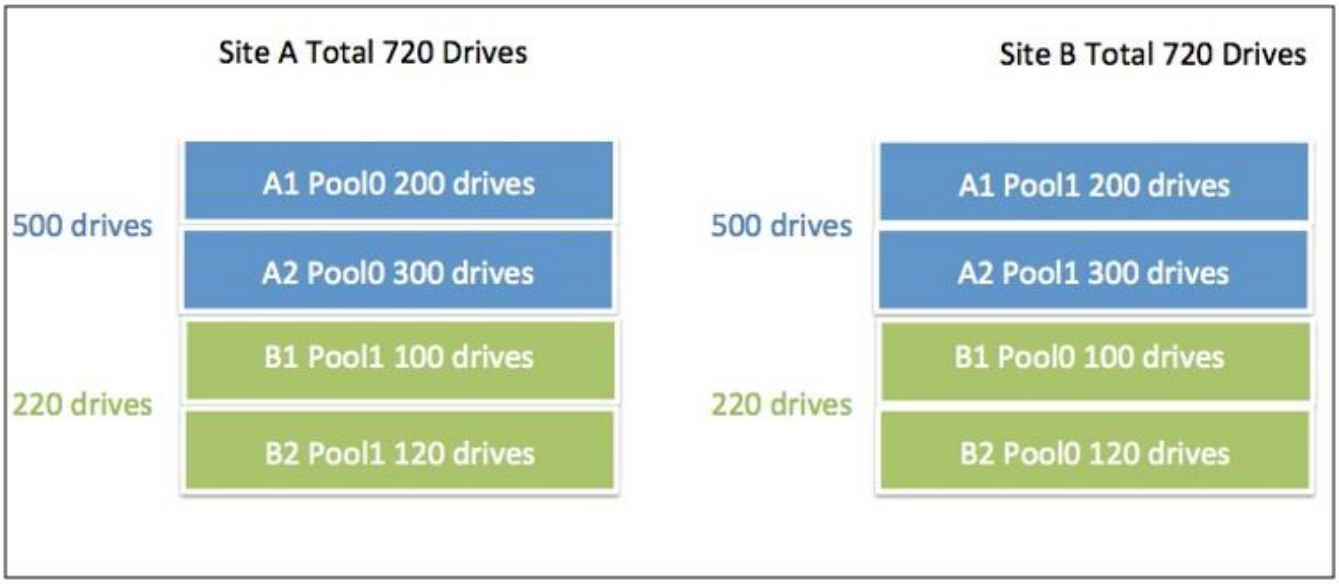

Last update: 2017-11-02 21:05

(NetApp Confidential - Limited Use) Nabil Fares | 01-05-2018 21:41

Requirements

How are LUNs assigned in a MetroCluster configuration with storage arrays?

The minimum required aggregate size for data and root aggregates is the same in MetroCluster as for clustered Data ONTAP. Therefore, sufficient LUNs must be created to satisfy this requirement, including NetApp Snapshot® reserve space. For more guidance, see the best practices in TR-3461: V-Series Best Practices Guide.

Data and root aggregates are mirrored to both sites. At least one data aggregate per node is required; additional aggregates can be created as needed.

At least one spare per node should be available in each pool. The spare LUN is required in order to be able to write a core file in case of an ONTAP panic and block protocols are configured.

Pool0 and Pool1 for each node must contain the same number, type, and size of LUNs.

If only array LUNs are in the configuration (no FAS shelves), at installation, you must designate an additional LUN per node to be used for core dumps when they are generated. This LUN is not mirrored. The installation process prompts for the required size. For more information, see the FlexArray Installation Guide.

The table below shows LUN assignment for a four-node configuration. For the two-node configuration, omit the rows for nodes A2 and B2.

SiteA	
Node:A1-Pool0: ▪ LUNs for root aggregate ▪ LUNs for one or more data aggregates ▪ Spare LUN (minimum 1) for core dumps (if there are no FAS shelves)	Node:A1-Pool1: ▪ LUNs for ▪ LUNs for ▪ Spare LU
Node:A1-Pool0: ▪ LUNs for root aggregate ▪ LUNs for one or more data aggregates ▪ Spare LUN (minimum 1) for core dumps	Node:A2-Pool1: ▪ LUNs for ▪ LUNs for ▪ Spare LU
Node:B1-Pool1: ▪ LUNs for root aggregate ▪ LUNs for one or more data aggregates ▪ Spare LUN (minimum 1) for core dumps (if there are no FAS shelves)	Node:B1-Pool0: ▪ LUNs for ▪ LUNs for ▪ Spare LU shelves)

(NetApp Confidential - Limited Use) Nabil Fares | 01-05-2018 21:41

Requirements

Node:B2-Pool1:	Node:B2-Pool0:
▪ LUNs for root aggregate ▪ LUNs for one or more data aggregates ▪ Spare LUN (minimum 1) for core dumps	▪ LUNs for ▪ LUNs for ▪ Spare LU shelves)

Last update: 2017-11-02 21:14

(NetApp Confidential - Limited Use) Nabil Fares | 01-05-2018 21:41

Requirements

Does a MetroCluster All Flash FAS configuration require a PVR?

No. Starting in clustered Data ONTAP 8.3.1, a PVR is no longer required for All Flash FAS MetroCluster. All Flash FAS configurations other than MetroCluster now automatically use SSD partitioning for the root aggregate. However, All Flash FAS MetroCluster configurations do not support this partitioning and are installed with non-partitioned drives in the root aggregate. In 8.3.0, MetroCluster All Flash FAS configurations require a PVR.

	MCC 2-node	MCC 4-node	MCC 8-node
	MAX HDDs	MX HDDs	MAX HDDs
FAS8020	480	480	960
FAS8020	720	720	1440
FAS8200	480	480	960
FAS9000	1440	1440	2880

Last update: 2017-11-02 21:26

(NetApp Confidential - Limited Use) Nabil Fares | 01-05-2018 21:41

Requirements

How much Flash Pool cache can be configured in a MetroCluster configuration?

Like any other mirrored aggregate, Flash Pool aggregates must be mirrored on both sites. In the event of a site switchover followed by HA takeover, one node services the workloads of all the nodes. Because of the considerations, Flash Pool cache sizes are halved in MetroCluster configurations compared with configurations other than MetroCluster. The Flash Pool size is also limited by the maximum number of SSDs supported. For the maximum HA pair Flash Pool sizes for each controller model, see the Flash Pool Technical FAQ.

For example, consider a FAS8080 EX configuration: In Data ONTAP 8.3 without MetroCluster, the maximum cache size with Flash Pool is 144TiB for an HA pair. In MetroCluster with FAS8080 EX, the maximum cache size with Flash Pool is 72TiB across the four nodes in the DR group, with the equivalent 72TiB mirrored. The total amount of Flash Pool cache can be assigned in any way between the two clusters, as long as all of it is mirrored and the maximum cache size is not exceeded. The following Flash Pool configurations in Table 6 are valid, among many others.

Sample Flash Pool Configuration 1: Even Distribution	
SiteA	**SiteB**
A local plexes: 36TiB	A remote plexes: 36TiB
B remote plexes: 36TiB	B local plexes: 36TiB
Sample Flash Pool Configuration 2: Different Amounts of Flash Pool Cache in the 2 Clusters	
A local plexes: 62TiB	A remote plexes: 62TiB
B remote plexes: 10TiB	B local plexes: 10TiB
Sample Flash Pool Configuration 3: Flash Pool Only on One Cluster	
A local plexes: 72TiB	A remote plexes: 72TiB

Last update: 2017-11-02 21:33

(NetApp Confidential - Limited Use) Nabil Fares | 01-05-2018 21:41

Requirements

Can I verify the FCIP ISL latency between the two MetroCluster clusters?

Yes. MetroCluster provides the ability to verify the FCIP ISL latency between the two MetroCluster clusters using the statistics CLI command. MetroCluster tracks the maximum, minimum, and average latency of the FCIP ISL every 15 minutes for the last four hours.

```
mcc4-siteB::*> statistics show -object mcculp -instance Port_0_15_min -raw -node local

Object: mcculp
Instance: Port_0_15_min
Start-time: 6/4/2015 07:31:26
End-time: 6/4/2015 07:31:26
Node: mcc4-b2

    Counter                                                     Value
    ------------------------------- --------------------------------
    avg_latency                                                  55us
    instance_name                                        Port_0_15_min
    max_latency                                                1118us
    min_latency                                                  39us
    node_name                                                 mcc4-b2
    process_name                                                    -
    total_completions                                         145485
7 entries were displayed.
```

In addition, latency can be measured on the Cisco 9250i FCIP switch using the ips CLI command.

```
cisco9250i-fcs5# ips measure-rtt 192.168.0.10 interface IPStorage 1/1
Round trip time is 54 micro seconds (0.05 milli seconds)
```

For more information, see the knowledge base article# 1015624.

Note: Average latency between the two MetroCluster clusters must not exceed 2ms.

Last update: 2017-11-03 14:29

(NetApp Confidential - Limited Use) Nabil Fares | 01-05-2018 21:41

Requirements

How do I create a quote for an FCIP MetroCluster deployment?

The Brocade 7840 is in a different switch Quote Tool menu and not the same as the MetroCluster configuration of Cisco 9250i. This will be updated in a future release of Quote Tool. Follow these steps to create a quote for the Cisco FCIP switch in the Quote Tool:

1. Select **Configure a new cluster** and check the **Configure a new MetroCluster** option.

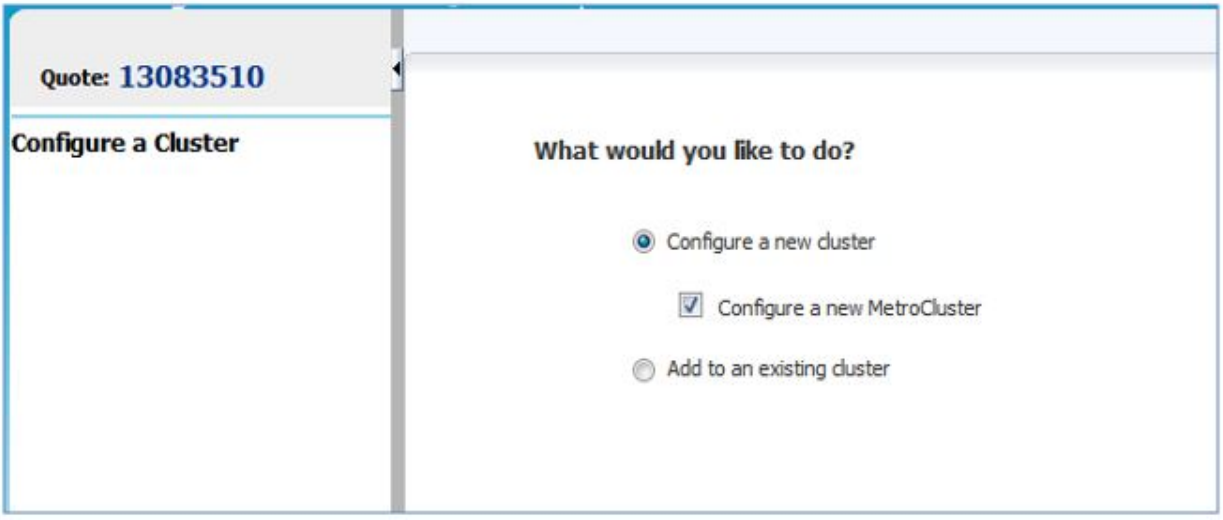

2. Select the NetApp controller model and the number of nodes in the MetroCluster cluster.

Requirements

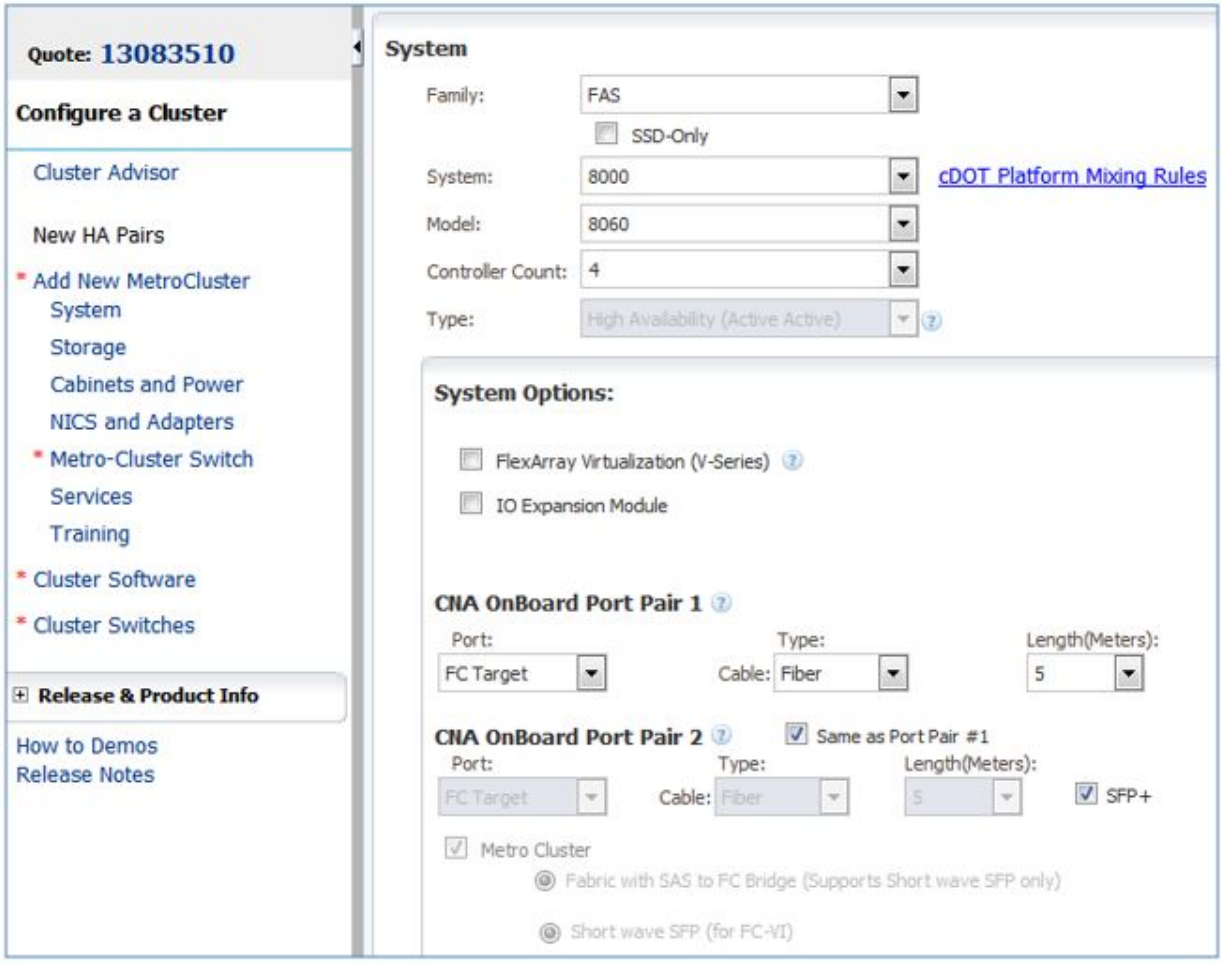

Note: The Cisco MDS 9250i FCIP switch is only supported on fabric MetroCluster configurations

3. Select the **Cisco** manufacturer option and the **Cisco MDS 9250i** mode.

4. Select the **Stand Alone Switch** option to choose the **MDS 9250i 12-port FCIP** type.

(NetApp Confidential - Limited Use) Nabil Fares | 01-05-2018 21:41

Requirements

5. Include the supported 10Gbps SFPs for FCIP configurations in the quote: Part number: X-SFP-10G-LR-R6

Note: Refer to the Cisco Storage Interoperability Matrix for DWDM systems supported by the Cisco MDS 9250i FCIP ports

Last update: 2017-11-03 15:54

(NetApp Confidential - Limited Use) Nabil Fares | 01-05-2018 21:41

Requirements

What are the requirements for the ISLs between switches?

ISLs must be dedicated to MetroCluster. Only ISLs over dark fiber (dedicated fiber cabling with “no protocol” on it) or xWDMs (as per the switch vendor’s interoperability matrix) are supported.

The minimum supported ISL speed is 4Gb; 8Gb and 16Gb are also supported. ISLs with a speed of 2Gb do not provide sufficient bandwidth for the number of nodes and could lead to performance issues.

The switch port and SFP must support the ISL speed and distance. SW SFPs that are supplied by NetApp support ISL distances of up to 15.5 miles (25 kilometers) with Brocade switches. For ISL distances and speeds that are supported with SFPs from NetApp, see the IMT.

For longer distances, LW SFPs or xWDM devices between the locations are required. For supported equipment details over longer distances, see the Brocade and Cisco interoperability matrixes. This issue is also addressed in the question “How do I check the required Cisco and Brocade LW SFP and xWDM support?” Any SFP that is supplied by a third party must be supported by the switch vendor and the supported switch firmware version.

One to eight ISLs per fabric are supported. NetApp recommends two or more ISLs per fabric for all platforms except FAS8080 and FAS9000 EX. NetApp recommends four ISLs per fabric for optimal performance for the FAS8080 and 6 ISL’s per fabric for FAS9000 in a 4node configuration. For 8node MetroCluster, additional ISL bandwidth will be needed.

In general, NetApp does not specify the requirements for the physical cable between sites. However, the link must have a dedicated lambda (wavelength), and the link must be supported by the switch vendor for the distance, switch type, and firmware version.

Here are a few additional considerations for ISL configuration:

- Metro-E (any non-FC native framing or signaling) is not supported. Metro-E is Ethernet framing or signaling either natively over a metro distance or through some TDM, MPLS, or xWDM technology.
- TDM (SONET/SDH) is supported as long as native FC frames are transmitted over the link without any conversion from FC to another protocol. TDMs might require changing signaling parameters on the switch, but those settings should come from the TDM or switch vendor.
- FCR (native FC routing) extensions are not supported for the back-end fabric.

Requirements

How do I check the required Cisco and Brocade LW SFP and xWDM support?

- **Brocade:** For distances of up to 15.5 miles (25 kilometers), SW SFPs that are supplied by NetApp can be used as shown in the IMT. Select the proposed switch, ISL distance, and speed. In the ISL Type column, the SFPs that NetApp supplies are listed if they are available.
  For longer distances, either LW SFPs or xWDM equipment is required, and they should be selected from those listed in the Brocade interoperability matrix: http://www.brocade.com/downloads/documents/matrices/brocade-compatibility-matrix-fos-7x-mx.pdf

- **Cisco:** You can view the Cisco interoperability matrix for the MDS 9148, 9148S, and 9250i on the Cisco product support page. For example, the Cisco MDS 9148 fabric switch details can be found at http://www.cisco.com/c/en/us/products/storage-networking/mds-9148-multilayer-fabric-switch/index.html. The relevant row is for DS-C9148-K9. After you confirm that the SFPs DS-SFP-FC8G-XX are supported, see the table later in the document for 8Gb SFPs and verify the distance needed.
  The table below shows the supported 8Gb Cisco SFPs and the equivalent NetApp part numbers at the time of the writing, but NetApp recommends that you always verify with the Cisco matrix. For example, at a 6-mile (10-kilometer) distance, NetApp part number X-DS-SFP-FC8G-LW-R6 is required. For longer distances, xWDM equipment is generally required, and those items are also listed in a separate table in the Cisco matrix.

Cisco Part Number	NetApp Part Number	Wavelength	Maximum Distance
DS-SFP-FC8G-SW	X-DS-SFP-FC8G-SW-R5	850nm	--
DS-SFP-FC8G-LW	X-DS-SFP-FC8G-LW-R6	1310nm	6mi (10km)
DS-SFP-FC8G-ER	X-DS-SFP-FC8G-ER-R6		25mi (40km)

Last update: 2017-11-03 18:09

(NetApp Confidential - Limited Use) Nabil Fares | 01-05-2018 21:41

Requirements

What distances are supported using SW optics between the switch and the xWDM?

The table below shows the maximum distances supported using SW optics between the switch and the xWDM.

Speed (Gbps)	Maximum Distance (m)		
	16Gbps SW SFP		
	OM2	**OM3**	**OM3+PM4**
2	n/a	n/a	n/a
4	150	270	270
8	50	150	170
16	35	100	125

Note: Only multimode SFP+ cables are supported.

Last update: 2017-11-03 18:18

(NetApp Confidential - Limited Use) Nabil Fares | 01-05-2018 21:41

Requirements

How many shelves are supported in a FibreBridge-attached stack with MetroCluster?

Up to 10 shelves per stack are supported when only HDDs are used. Mixing disk types (for example, IOM3, IOM6) in the stack is supported as described the storage subsystem requirements.

If SSDs are present in the FibreBridge stack, the supported maximum stack depths are shown in Table 9. The total number of shelves includes SSD-only shelves, mixed SSD-HDD shelves, and HDD-only shelves. Up to 96 SSDs can be present in any single disk stack on the ATTO 7500N, and the SSDs can be distributed across any of the shelves. On the ATTO 6500N up to 48 SSDs can be present in a single disk stack. However, NetApp recommends that you not mix SSDs and HDDs in the same shelf, but instead configure SSD-only shelves.

Furthermore, for optimal performance, NetApp recommends that you place SSD-only shelves either in their own dedicated stack (no HDD shelves) or at the top or the bottom of a mixed SSD and HDD stack. In that way, the SSD shelves connect directly to the FibreBridge. In this instance, the SSD shelves likely contain pools from more than one node, so disk ownership must be manually assigned. For all-SSD aggregates, stacks should contain SSD only, with no more than two SSD shelves in the stack. Optimal performance is achieved with one SSD shelf per stack.

Disk Configuration	Disk Type	Total shelves per FibreBrid		
		ATTO 6500N		
All SSDs	SSD	2		
All HDDs	HDD	10		
Mixed SSD + HDDs	SSD	1	2	
	HDD	6	2	

Last update: 2017-11-03 18:28

Requirements

Since only two FC ports on the ATTO 7500N are used, can one ATTO 7500N be used per stack?

No. Each storage stack requires two ATTO 7500N FibreBridges for redundancy.

Last update: 2017-11-03 18:44

(NetApp Confidential - Limited Use) Nabil Fares | 01-05-2018 21:41

Requirements

What is the factory default configuration of the disk shelves between the four SAS ports?

By default, the disk shelves are equally distributed between the four SAS ports. In addition, both FC ports are connected. As a general best practice, SSD and HDD disk shelves should be connected to different SAS ports.

Last update: 2017-11-03 18:44

(NetApp Confidential - Limited Use) Nabil Fares | 01-05-2018 21:41

Requirements

What is the factory default configuration of the ports on the ATTO 6500N and 7500N?

The table below shows the factory default port configuration.

Port	ATTO 6500N	ATTO 7500N
Ethernet	Both enabled	Both enabled
FC	FC-1 and FC-2 enabled	FC-1 and FC-2 enabled
SAS	SAS-1 enabled, SAS-2 disabled	SAS-1/2/3/4 enabled

Last update: 2017-11-03 18:47

(NetApp Confidential - Limited Use) Nabil Fares | 01-05-2018 21:41

Requirements

Can only one FC port be used for ATTO 6500N FibreBridge connectivity?

Yes. MetroCluster supports using only one FC port with the ATTO 6500N fabric configuration.

Last update: 2017-11-03 18:48

(NetApp Confidential - Limited Use) Nabil Fares | 01-05-2018 21:41

Requirements

Can two FC ports be used for the ATTO 7500N FibreBridge connectivity?

Yes. When connecting multiple stacks to the ATTO FibreBridge, the best practice is to use two FC ports for optimal performance.

Last update: 2017-11-03 18:48

(NetApp Confidential - Limited Use) Nabil Fares | 01-05-2018 21:41

Requirements

Can I nondisruptively replace an ATTO 6500N with the ATTO 7500N?

Yes. the ATTO 6500N can be replaced with the ATTO 7500N without a disruption. For more information, view the procedure in the MetroCluster Service Guide.

Last update: 2017-11-03 18:48

(NetApp Confidential - Limited Use) Nabil Fares | 01-05-2018 21:41

Requirements

What firmware version is supported on ATTO 7500N?

Check the IMT to verify supported configurations, including the supported ATTO 7500N firmware versions.

Last update: 2017-11-03 18:49

(NetApp Confidential - Limited Use) Nabil Fares | 01-05-2018 21:41

Requirements

What should I be aware of when deploying the ATTO 7500N?

When deploying the ATTO 7500N FibreBridges:

- Make sure to follow the cabling and zoning guidance in the MetroCluster Installation and Configuration Guide
- The management port is configured using the serial port.
  Note: IPDHCP must be set to disabled.
- Health monitoring is not supported.
- SNMP is not supported.
- Read and understand the MetroCluster management, installation and service guides. For more information, view the MetroCluster documentation for clustered Data ONTAP.

Last update: 2017-11-03 18:51

(NetApp Confidential - Limited Use) Nabil Fares | 01-05-2018 21:41

Requirements

How do I configure the management port on the ATTO 7500N?

The management port is configured from the serial port. All Ethernet ports are enabled by default but at least one requires manual configuration for connectivity. The FibreBridge CLI commands are used to configure the management port. Configure IPDHCP to disabled. Use the following commands:

```
set IPDHCP [mp1 | mp2] disabled
 set IPAddress [mp1 | mp2] <IP address>
 set IPSubnetMask [mp1 | mp2] <IP subnet mask>
 set IPGateway [mp1 | mp2] <IP gateway>
 SaveConfiguration Restart
```

Last update: 2017-11-03 18:52

(NetApp Confidential - Limited Use) Nabil Fares | 01-05-2018 21:41

Requirements

How do I upgrade the firmware on ATTO 7500N?

Instructions for upgrading the ATTO 7500N firmware is available on the NetApp Support site in the MetroCluster Service Guide.

Last update: 2017-11-03 18:52

(NetApp Confidential - Limited Use) Nabil Fares | 01-05-2018 21:41

Requirements

Is the MetroCluster stretch configuration supported with the ATTO 7500N?

Yes. The ATTO 7500N supports stretch configurations using short-ware (SW) optics.

Last update: 2017-11-03 18:53

(NetApp Confidential - Limited Use) Nabil Fares | 01-05-2018 21:41

Requirements

What distances are supported using SW optics with the ATTO 7500N?

For the maximum distances supported using SW optics with the ATTO 7500N. check the IMT.

Last update: 2017-11-03 18:54

(NetApp Confidential - Limited Use) Nabil Fares | 01-05-2018 21:41

Requirements

Can the ATTO 6500N and the ATTO 7500N coexist in the same MetroCluster disk stack?

Yes. A disk stack can mix the ATTO 6500N and the ATTO 7500N in the same MetroCluster configuration (for example, a different FibreBridge at each end of the disk stack). However, in this configuration, only one FC and one SAS can be used. It is required to use SAS port 1 and FC1 in this configuration. Disable SAS ports 2, 3, 4 and FC2. This behavior is similar to the ATTO 6500N.

Last update: 2017-11-03 18:54

(NetApp Confidential - Limited Use) Nabil Fares | 01-05-2018 21:41

Requirements

Can the ATTO 6500N and the ATTO 7500N coexist in same MetroCluster configuration?

Yes. One disk stack can connect to a pair of ATTO 6500N FibreBridges and another disk stack can connect to a pair of ATTO 7500N FibreBridges in the same MetroCluster configuration.

Last update: 2017-11-03 18:55

(NetApp Confidential - Limited Use) Nabil Fares | 01-05-2018 21:41

Requirements

Is the four-port 8Gbps FC card (X1132A-EN-R6-C) supported with the ATTO 7500N?

Check the IMT to verify supported configurations, including support for FC cards.

Last update: 2017-11-03 18:55

(NetApp Confidential - Limited Use) Nabil Fares | 01-05-2018 21:41

Requirements

What are disk shelf models supported with the ATTO 6500N and the ATTO 7500N?

NetApp DS2246, DS4246, and DS4243 disk shelves are supported. Check the IMT for updates to the supported disk shelves.

Last update: 2017-11-03 18:56

(NetApp Confidential - Limited Use) Nabil Fares | 01-05-2018 21:41

Requirements

Can disk shelves with unmirrored aggregates be connected directly to the FAS or AFF controller?

MetroCluster direct-attach configurations supports both mirrored and unmirrored aggregates which are directly to the controller. MetroCluster bridge-attach and fabric configurations require all disk shelves to connect to the ATTO bridges for both mirrored and unmirrored shelves. All the disks are required to be visible to all the nodes in the DR group.

Last update: 2017-11-03 18:56

(NetApp Confidential - Limited Use) Nabil Fares | 01-05-2018 21:41

Requirements

Which SAN OSs are supported?

For SAN OS support, see the IMT. Configure the hosts according to standard NetApp best practices for clustered Data ONTAP.

Last update: 2017-11-03 18:56

(NetApp Confidential - Limited Use) Nabil Fares | 01-05-2018 21:41

Requirements

What SAN host connectivity (front end) is required?

MetroCluster has full identity preservation on switchover and switchback. SVMs keep the same WWNN; FCP LIFs keep the same WWPNs; and iSCSI LIFs keep the same IP address and TPG tags. The only difference is that LUNs are presented on different ports on a different switch. Hosts do not need to rediscover the LUNs, which keep the same IDs. It is therefore required that SAN hosts have cross-site connectivity; that is, the SAN front-end fabric must span across both sites.

Last update: 2017-11-03 19:00

(NetApp Confidential - Limited Use) Nabil Fares | 01-05-2018 21:41

Requirements

Which components are required in a MetroCluster configuration?

The diagram below shows the components for four-node MetroCluster. The two-node fabric configuration is similar, except that there is only one node per site.

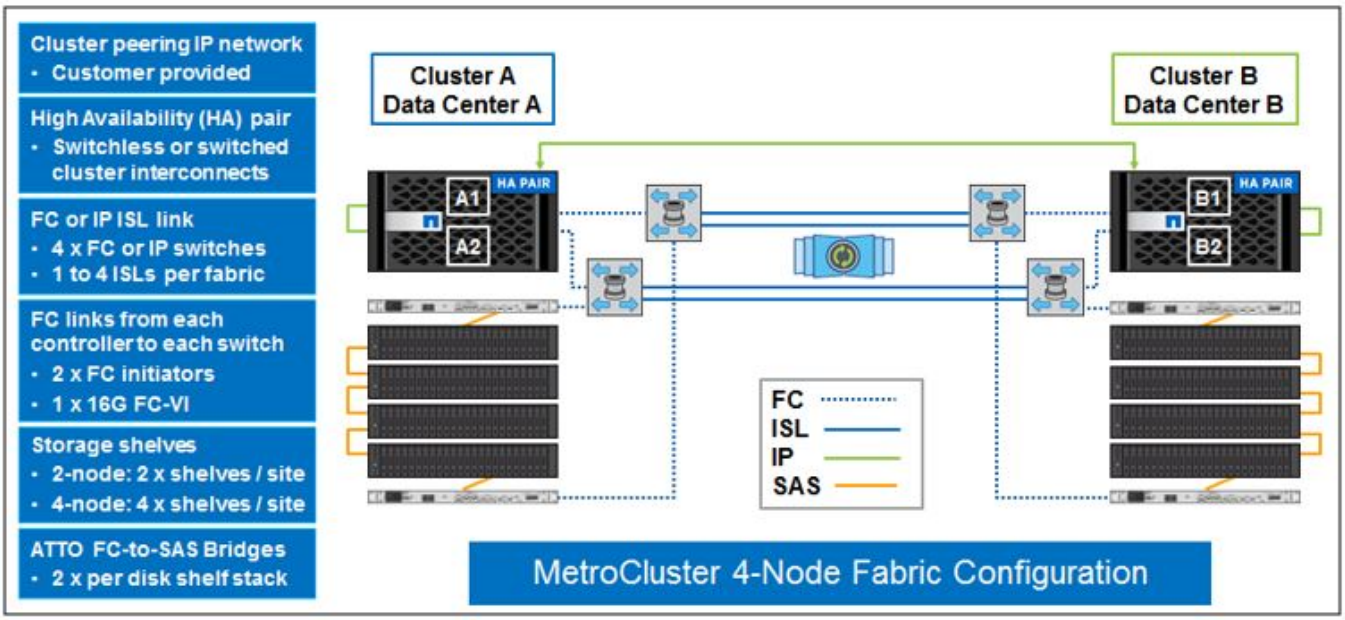

When you configure SAS cables, the number of shelf-to-shelf cables required for a stack with X shelves is (X–1) x 2. In the example given for the minimum recommended stack of four shelves, (4–1) x 2 = 6 SAS cables per stack are required.

QuoteEdge is used for all MetroCluster configurations; for more guidance on using the Quote Tool for MetroCluster, see MetroCluster QTB and the recorded deep-dive session about quoting MetroCluster on the Field Portal.

Last update: 2017-11-03 19:02

(NetApp Confidential - Limited Use) Nabil Fares | 01-05-2018 21:41

Architecture

MCC Replication

In the eight-node and four-node configurations, every node in a MetroCluster configuration has a local HA partner in the same cluster and has a DR partner in the remote cluster. As an example, consider a site A cluster with nodes A1 and A2 and a site B cluster with nodes B1 and B2. A1 and A2 are HA partners (See diagram). Nodes A1 and B1 are DR partners. Nodes B1 and B2 are HA partners. Nodes A2 and B2 are DR partners.

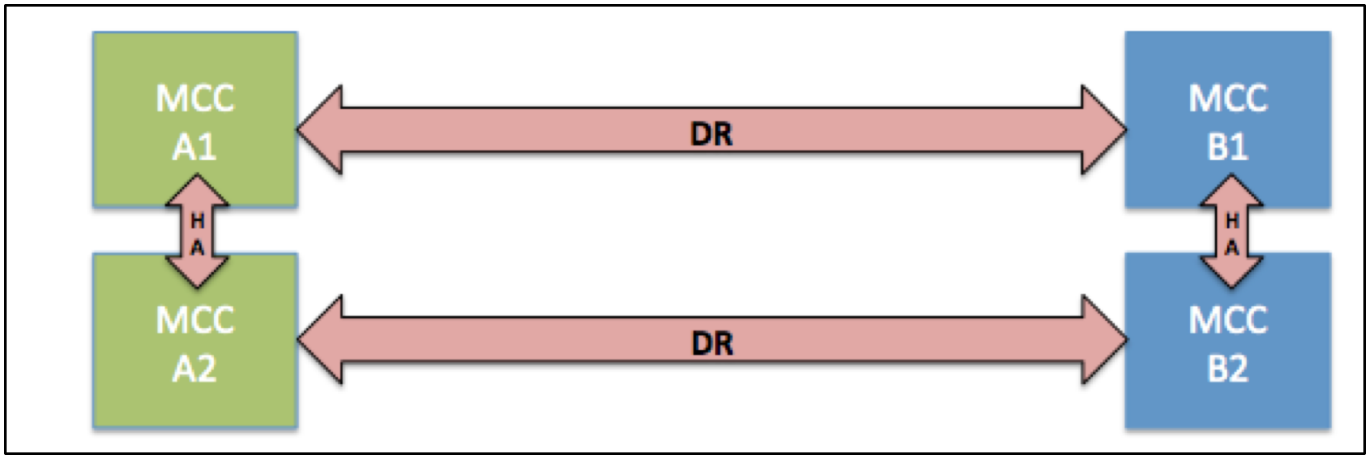

Last update: 2017-05-25 23:54

(NetApp Confidential - Limited Use) Nabil Fares | 01-05-2018 21:41

Architecture

Which types of replication are used in MetroCluster?

Three types of replication are used in MetroCluster:

- **Storage.** All of a node’s mirrored aggregates, including the root aggregate, are replicated to its DR partner through the ISLs. Each aggregate contains disks from two plexes. One plex is local, and the other plex is located on the DR partner. SyncMirror is used to keep the plexes in sync. The local node owns all disks in the aggregate during normal operation. Disk ownership is transferred to the DR partner during switchover.
- **NVRAM.** All NVRAM replication is over the FC-VI connection:
    - In the eight-node and four-node configurations, each node mirrors its NVRAM locally to its HA partner over the HA interconnect and remotely to its DR partner over FC-VI by using the ISLs.
    - In a two-node configuration, NVRAM is replicated between the two nodes. In the two-node fabric configuration, as in the four-node configuration, the FC-VI NVRAM replication traffic uses the ISLs. NVRAM is replicated between the two nodes. In the two-node stretch configurations, the replication is routed over the direct FC-VI connection, separate from the storage replication path.
- **Cluster configuration.** Each cluster replicates its configuration over the customer-supplied IP-based cluster peering network. The configuration mechanism is known as the configuration replication service (CRS). CRS sends over the configuration objects, such as SVMs, volumes, and LUNs, that must exist in the other cluster’s replicated database (RDB) to allow a switchover. Throughput requirements for the cluster peering network are similar to those of SnapMirror. The cluster peering network should be configured with dual links for redundancy (two intercluster LIFs per node, each LIF to an independent network).

Last update: 2017-10-30 22:20

(NetApp Confidential - Limited Use) Nabil Fares | 01-05-2018 21:41

Architecture

Must all aggregates be mirrored in a MetroCluster configuration?

Starting in ONTAP 9.0, all MetroCluster configurations support both mirrored and unmirrored aggregates. Only data contained in mirrored aggregates is replicated to the partner DR site. Root aggregates and a minimum of one data aggregate must be mirrored with SyncMirror.

Prior to ONTAP 9, all aggregates, including the root aggregate, must be mirrored with SyncMirror.

Last update: 2017-10-30 22:21

(NetApp Confidential - Limited Use) Nabil Fares | 01-05-2018 21:41

Architecture

Should unmirrored aggregates be created from pool0?

Unmirrored aggregates should only be built from disks located in pool0 (local to the node). Otherwise all IO would traverse the ISL and may cause congestion and performance problems. Multi-disk panic’s can also occur if the ISL connections fail.

Last update: 2017-10-30 22:22

(NetApp Confidential - Limited Use) Nabil Fares | 01-05-2018 21:41

Architecture

Is SyncMirror supported for configurations without MetroCluster?

Local SyncMirror is supported for aggregate replication within an HA pair in a cluster without MetroCluster. It does not require a PVR or any additional Data ONTAP license. An aggregate mirrored with SyncMirror is written to two plexes that are owned by the same node. FC-VI is supported only with MetroCluster configurations; therefore, local SyncMirror is restricted to HA distances. Aggregates can be mirrored between plexes on the same node (separate stacks) SyncMirror is not supported for Flash Pool aggregates by using advanced disk partitioning (ADP). However, SyncMirror on an All Flash FAS with root disk partitioning is supported for aggregates on the data partitions.

For more information about SyncMirror without MetroCluster, see the High Availability Guide, Data Protection Guide, and Commands Reference publications in the ONTAP Product documentation.

Last update: 2017-10-30 22:22

(NetApp Confidential - Limited Use) Nabil Fares | 01-05-2018 21:41

Architecture

Is synchronous or semi-synchronous SnapMirror available in Data ONTAP 8.3.x?

No. MetroCluster uses RAID SyncMirror at the aggregate level. NetApp SnapMirror software in clustered Data ONTAP is at the volume level and operates in asynchronous mode only.

Last update: 2017-10-30 22:23

(NetApp Confidential - Limited Use) Nabil Fares | 01-05-2018 21:41

Architecture

What is the read and write behavior with plexes in SyncMirror (including MetroCluster)?

By default, when both plexes of an aggregate are online and in sync, data is read from the local plex only, and data is written synchronously to both plexes. If either of the plexes is offline or in the process of being resynchronized, data is read from and written to only the online plex. Either the local or the remote plex could fail (for example, a shelf failure), and data access would continue seamlessly to the surviving plex.

Optionally, a RAID parameter can be set so that reads alternate from the local and the remote plexes. By default, as just described, reads are from the local plex only. The RAID option can be changed nondisruptively, without affecting application I/O. To set the option to read from alternate plexes, use the following command on each node in the HA pair:

```
storage raid-options modify -node <node-name> -name raid.mirror_read_plex_pref -value alternate
```

The above command is only recommended for Stretch configurations. Otherwise, it can lead to ISL degradation.

To set the option back to the default setting, specify –value local on the same command.

In the eight-node and four-node configurations, NetApp strongly recommends that you set the option to the same setting on both nodes of an HA pair. There might be particular workload environments such that different read behavior on each node gives optimal performance. If the setting is different between the nodes, the configured value does not propagate to the other node in the event of an HA failover.

Last update: 2017-10-30 22:29

(NetApp Confidential - Limited Use) Nabil Fares | 01-05-2018 21:41

Architecture

What is the switchover granularity of MetroCluster?

MetroCluster uses synchronous replication and can achieve a zero RPO and a low RTO (two minutes for planned or automatic switchover and switchback). MetroCluster switchover operates at the site level: All aggregates, volumes, LUNs, and SVMs switch over to the other site. It is not possible to switch over at a smaller granularity such as an individual SVM.

Last update: 2017-10-30 22:29

(NetApp Confidential - Limited Use) Nabil Fares | 01-05-2018 21:41

Architecture

Can data on the remote plex be accessed by the DR partner during normal operation?

No, a volume or LUN is online on only one cluster at a time and cannot be accessed on the other cluster. Client or application access (including NetApp SnapMirror, SnapVault®, and FlexClone® technology) is not possible on the remote cluster unless a switchover is performed. It is not possible to temporarily “break the relationship” so that operations such as SnapMirror, SnapVault, or FlexClone can be performed by the remote cluster. Remember that MetroCluster uses SyncMirror at the aggregate level, not volume-based SnapMirror.

Last update: 2017-10-30 22:30

(NetApp Confidential - Limited Use) Nabil Fares | 01-05-2018 21:41

Architecture

What happens if all ISLs in a fabric MetroCluster are down?

Each cluster continues to serve its own workloads, writing data to its local plex only. No storage SyncMirror or NVRAM replication occurs as long as there are no available ISLs between the clusters. As soon as at least one link is restored, the NVRAM replication resumes, and each aggregate’s remote plex automatically resyncs with the local plex.

Last update: 2017-10-30 22:30

(NetApp Confidential - Limited Use) Nabil Fares | 01-05-2018 21:41

Architecture

What happens if the links fail in a two-node stretch MetroCluster configuration?

In two-node fabric MetroCluster, because storage and FC-VI replication occur over the same ISLs, the behavior is the same as in four-node MetroCluster. The two nodes in the fabric MetroCluster continue to run independently.

In stretch MetroCluster, the storage is connected directly to the nodes, and the FC-VI link for NVRAM replication is a separate connection.

Depending on which link fails, NVRAM replication can be lost, or RAID sync replication can be lost as well. This will lead to loss of DR protection.

Last update: 2017-10-30 22:31

(NetApp Confidential - Limited Use) Nabil Fares | 01-05-2018 21:41

Architecture

How is the MetroCluster DR partner assigned in the 8-node MetroCluster configuration?

In the 8-node MetroCluster configuration the DR partner site will have two HA pairs. MetroCluster will match the lowest controller system id of the primary site with the lowest controller system id at the partner site. All controllers in the DR group at each site must be the same platform. But the two DR groups may have different platforms, e.g. AFF8080 in DR group #1 and FAS8080 in DR group #2

Last update: 2017-10-30 22:32

(NetApp Confidential - Limited Use) Nabil Fares | 01-05-2018 21:41

Architecture

Does eight-node MetroCluster support mixing FAS and AFF controllers?

Yes. Mixing FAS and AFF HA pairs is supported in the eight-node MetroCluster configuration.

Last update: 2017-10-30 22:33

(NetApp Confidential - Limited Use) Nabil Fares | 01-05-2018 21:41

Architecture

How does MetroCluster replicate data in an eight-node configuration?

Data is replicated between an HA pair on the primary site and an HA pair at the partner site.

Last update: 2017-10-30 22:33

(NetApp Confidential - Limited Use) Nabil Fares | 01-05-2018 21:41

Architecture

Does MetroCluster support clustered Data ONTAP nondisruptive upgrades (NDU)?

Yes. In the eight-node and four-node configurations, NDU is used in MetroCluster to upgrade the Data ONTAP version. This method uses takeover and giveback on the HA pairs at each site to upgrade Data ONTAP nondisruptively. For a major update, **the two sites must be updated in parallel** to preserve the DR protection. For minor release updates (for example, from 8.3.0 to 8.3.1), the two clusters can be upgraded independently and still preserve DR protection. However, NetApp recommends that you complete the upgrade of both sites as soon as possible. Automated NDU can be used for minor Data ONTAP upgrades at each site.

In two-node configurations, a negotiated switchover is used to update each cluster in turn non-disruptively.

Last update: 2017-10-30 22:34

(NetApp Confidential - Limited Use) Nabil Fares | 01-05-2018 21:41

Architecture

Can MetroCluster switch over if the clusters are running different minor Data ONTAP versions?

Minor upgrades should be completed across both clusters as soon as possible. If the two clusters are running different minor versions, administrators should not perform unplanned switchover until all nodes have been upgraded to the same release. If an unplanned switchover is required when the clusters have different minor versions, the operation will succeed however there may be some cluster configuration data not replicated. After switchover in this instance, before performing the switchback, it is necessary to heal the root aggregates, boot the recovering nodes, and upgrade them to the same Data ONTAP release as the surviving nodes. After both clusters are running the same release, the switchback can proceed.

Last update: 2017-10-30 22:34

(NetApp Confidential - Limited Use) Nabil Fares | 01-05-2018 21:41

Architecture

Is aggregate relocation (ARL) for nondisruptive controller upgrade supported with MetroCluster?

Yes. In the eight-node and four-node configurations, the process is performed one site at a time, not in parallel. Switchover is not used during the process.

All nodes must be upgraded to the same controller model. HA mirroring within the HA pair is disabled as each cluster is being upgraded. NVRAM mirroring between the sites must be disabled for the entire process. With HA and NVRAM mirroring disabled, DR protection is also disabled during the entire upgrade process, although storage replication with SyncMirror continues. After all controllers have been upgraded, NVRAM mirroring is reestablished. Planned switchover is not possible while the upgrade is in process. Unplanned switchover (on disaster) is possible, with the potential for loss of, at most, the last 10 seconds of transactions, due to the unmirrored NVRAM.

The ARL process for nondisruptive controller upgrade is lengthy, and the documented procedure must be followed precisely. See the manual Using Aggregate Relocation to Upgrade Controller Hardware on a Pair of Nodes Running Clustered Data ONTAP, which is available on the NetApp Support site.

In the two-node configuration, controller upgrade is performed by using negotiated switchover.

Last update: 2017-10-30 22:35

(NetApp Confidential - Limited Use) Nabil Fares | 01-05-2018 21:41

Architecture

Can a two-node configuration be converted to a four-node configuration?

Starting in ONTAP 9, two-node fabric and stretch configurations can be converted to four-node fabric configuration. The two-node configuration must be running ONTAP 9.0, as earlier versions are not supported for conversion. Prior to ONTAP 9, conversion from a two-node configuration to a four-node configuration is not supported. NetApp strongly recommends that customers who need local HA functionality deploy the four-node architecture. The procedure is disruptive and requires the clusters at both sites to be powered down during the conversion. The conversion is in-place and does not require a data copy. Conversion from 2 node stretch to 4 node fabric requires additional switches and rewiring.

There are settings (haosc value) which needs to be changed in maintenance mode and that changes how the NVRAM is replicated. If the nodes aren’t offline when these changes are made, there will be NVRAM corruption which would result in panic[1]s and possibly data corruption.

Last update: 2017-10-30 22:36

(NetApp Confidential - Limited Use) Nabil Fares | 01-05-2018 21:41

Architecture

Can a four-node configuration be converted to an eight-node configuration?

Yes. Starting in ONTAP 9, four-node fabric configurations can be converted to an eight-node fabric configuration. The conversion is in-place and does not require a data copy. The four-node configuration must be running ONTAP 9.0, as earlier versions are not supported for conversion. Please refer to MetroCluster installation guide for detailed procedure.

Last update: 2017-10-30 22:37

(NetApp Confidential - Limited Use) Nabil Fares | 01-05-2018 21:41

Architecture

Can a non-MetroCluster node be converted to MetroCluster?

No, a non-MetroCluster node cannot be converted to MetroCluster. The equipment can be repurposed but all data needs to be wiped out before using it in a MetroCluster setup.

Last update: 2017-10-30 22:37

(NetApp Confidential - Limited Use) Nabil Fares | 01-05-2018 21:41

Architecture

Is vol move supported with MetroCluster?

Yes, vol move is supported in the eight-node and four-node configurations. As in standard clustered Data ONTAP, volumes move between aggregates in a cluster and stay within the same SVM. MetroCluster does not provide the capability to nondisruptively move volumes from one cluster to another. If data needs to be transferred from one cluster to another, SnapMirror or any other host- or application-based copy mechanism can be used.

When a volume is moved, the local and remote plexes in the source and destination aggregates are synchronized with SyncMirror. The VLDB changes are replicated to the secondary cluster over the cluster peering network by using CRS.

Because the controllers belong to different clusters, vol move between MetroCluster controllers across sites is not possible. Vol move is possible only between aggregates that are attached to the same node within the same cluster.

Last update: 2017-10-30 22:38

(NetApp Confidential - Limited Use) Nabil Fares | 01-05-2018 21:41

Architecture

Is it possible to transfer data from a volume in a mirrored aggregate to an unmirrored aggregate?

Yes. Volumes in a mirrored aggregate can be moved to an unmirrored aggregate using the vol move command. Moving an SVM root volume or MetroCluster MDV to an unmirrored aggregate is not supported.

Last update: 2017-10-30 22:38

(NetApp Confidential - Limited Use) Nabil Fares | 01-05-2018 21:41

Architecture

Is vol rehost supported with MetroCluster?

Vol rehost is not supported in MetroCluster deployments.

Last update: 2017-10-30 22:38

(NetApp Confidential - Limited Use) Nabil Fares | 01-05-2018 21:41

Architecture

Can I nondisruptively replace an ATTO 6500N with the ATTO 7500N?

Yes. the ATTO 6500N can be replaced with the ATTO 7500N without a disruption. For more information, view the procedure in the MetroCluster Service Guide.

Last update: 2017-10-30 22:39

(NetApp Confidential - Limited Use) Nabil Fares | 01-05-2018 21:41

Architecture

Where can I find information about other maintenance operations with MetroCluster?

The MetroCluster Service Guide, available on the NetApp Support site under MetroCluster documentation, provides procedures for operations such as updating firmware and replacing FC switches and FibreBridges, and adding and removing storage shelves.

Last update: 2017-10-30 22:39

(NetApp Confidential - Limited Use) Nabil Fares | 01-05-2018 21:41

Architecture

How can 7-Mode (including FMC or SMC) customers transition to MetroCluster?

All transitions from Data ONTAP operating in 7-Mode (including FMC and SMC, as well as configurations without MetroCluster) to MetroCluster 8.3.x require data migration; in-place transition is not available. NetApp anticipates that the majority of customers make the transition as part of a technology refresh cycle. The choice of method for data migration and transition is subject to the same considerations as transitioning from 7-Mode to clustered Data ONTAP.

Last update: 2017-10-30 22:41

(NetApp Confidential - Limited Use) Nabil Fares | 01-05-2018 21:41

Architecture

Can FMC switches and ISLs be shared while transitioning to MetroCluster 8.3.x or 9.0?

Yes. During transition from a 7-Mode FMC to a fabric MetroCluster configuration, a MetroCluster 8.3.x configuration can be connected to the same Brocade 6510 switches that the 7-Mode FMC uses and can share the existing ISLs. Sufficient bandwidth must be available to support the resultant traffic, and the ISLs must be at a speed that MetroCluster 8.3.x supports. Documentation is available to describe the ports, zoning, and other steps that are required to set up this part of the process.

After the transition is complete, the 7-Mode FMC is disconnected from the fabric. The MetroCluster configuration can remain on its current switch ports. If you want to modify the configuration to the ports that were originally used by the 7-Mode FMC, a disruption is required.

Only Brocade 6510 switches are supported for fabric sharing during transition; for any other switch model used with FMC, separate supported switches and ISLs are required for the MetroCluster 8.3.x configuration. **Only one** 7-Mode FMC can share the switches with one MetroCluster 8.3.x configuration.

Note: In FMC running on Data ONTAP 7-Mode, 8Gb SFPs are used with the Brocade 6510 switch. MetroCluster 8.3.x supports only 16Gb SFPs for the 6510, and all components must connect to switch ports with 16Gb SFPs, including the FC initiators, FC-VI ports, and ATTO FibreBridges. The only exception to the 16Gb requirement is for the switch ports that attach to the ISLs. Therefore, the requisite number of 16Gb SFPs must be purchased to attach the MetroCluster 8.3.x components to a 6510. No extra license is required to enable support of 16Gb on the switch. Ports 23 and higher are used to attach the MetroCluster 8.3.x components, as documented in the MetroCluster Installation and Configuration Guide. If these ports have not already been enabled, the requisite Ports on Demand (PoD) license is required to activate them.

Last update: 2017-10-30 22:42

(NetApp Confidential - Limited Use) Nabil Fares | 01-05-2018 21:41

Architecture

Can the 7-Mode Transition Tool (7MTT) be used to transition from 7-Mode to MetroCluster 8.3.x/9.0?

Yes, 7MTT 2.0 or later supports transition from 7-Mode (including FMC and SMC) to MetroCluster 8.3.x. For 7-Mode MetroCluster migration to clustered Data ONTAP, you must use 7MTT's copy-based transition (CBT) method. Copy-free transition (CFT) in 7MTT is not supported for MetroCluster. Data is copied from the 7-Mode controllers to the MetroCluster 8.3.x destination cluster. Copying a volume into MetroCluster 8.3.x automatically syncs the data to the remote plex. The 7MTT prechecks advise that any volumes that are in unmirrored aggregates be transitioned to mirrored aggregates. The cutover requires a brief application outage. For more information, see the 7MTT Copy-based Transition Guide.

Application-, client-, and host-level methods, such as rsync or VMware Storage vMotion, can also be used. For more information, see TR-4052: Successfully Transitioning to Clustered Data ONTAP and TR-4336: Enterprise Application Transition to Clustered Data ONTAP 8.3.

Last update: 2017-10-30 22:43

(NetApp Confidential - Limited Use) Nabil Fares | 01-05-2018 21:41

Architecture

Is there a nondisruptive transition from 7-Mode (including FMC and SMC) to MetroCluster?

No. A disruption of applications is generally required when transitioning unless a nondisruptive application-specific method is used. The length of the disruption depends on the method that is used to migrate the data and how much manual reconfiguration is required. If you use 7MTT, the disruption time should be similar to the time required for transitioning to a clustered Data ONTAP environment without MetroCluster. For more information, see the 7MTT transition documentation.

Last update: 2017-10-30 22:43

(NetApp Confidential - Limited Use) Nabil Fares | 01-05-2018 21:41

Architecture

Can 7MTT be used to transition from single-node or HA pair 7-Mode systems to MetroCluster?

Yes. 7MTT 2.0 or later supports transition from 7-Mode systems without MetroCluster to MetroCluster 8.3.x/9.0. The 7MTT prechecks advise that any volumes that are in unmirrored aggregates be transitioned to mirrored aggregates.

Last update: 2017-10-30 22:44

(NetApp Confidential - Limited Use) Nabil Fares | 01-05-2018 21:41

Architecture

Can 7MTT transition 32-bit data from 7-Mode controllers to MetroCluster?

No. In any transition to Data ONTAP 8.3.x (MetroCluster or other than MetroCluster) by using 7MTT, only 64-bit data (including Snapshot copies) can be migrated. No 32-bit data can exist in clustered Data ONTAP 8.3.x. If 32-bit volumes or Snapshot data is detected on the source system, 7MTT prechecks block the transition. Before the transition, 32-bit aggregates must be converted to 64-bit (either by in-place upgrade in Data ONTAP 8.2.1 or, for earlier releases, by adding disks), and 32-bit Snapshot copies must be aged out or deleted. Before you can use 7MTT to transition to MetroCluster 8.3.x, the source 7-Mode controllers (whether MetroCluster or not) must be, at a minimum, the Data ONTAP 8.1.x release. For more information about 7MTT, see TR-4052: Successfully Transitioning to Clustered Data ONTAP.

Last update: 2017-10-30 22:44

(NetApp Confidential - Limited Use) Nabil Fares | 01-05-2018 21:41

Architecture

Can equipment that was previously running 7-Mode (FMC and SMC) be reused for MetroCluster 8.3.x/9.0?

Yes, controllers and storage can be reused. Verify that all hardware components (controllers, cards, storage, switches, ISL speed) are supported with the ONTAP version; additional or replacement parts might be required. In addition:

- Sufficient storage on each site must be available. Follow the recommended minimum disk shelves for the MetroCluster configuration.
- Follow the guidance for matching the controller models, as documented previously in this FAQ.
- Only the 16Gb FC-VI card (X1928) is supported with MetroCluster 8.3.x/9.0; the 8Gb FC-VI card (X1927) is not supported. If you order the FC-VI card as an add-on or quick shipment, you must select 16Gb SFPs (X6602A). These SFPs are automatically included in a MetroCluster quote.
- 16Gb SFPs are required for all ports on Brocade 6510 switches, apart from ISL ports. The Cisco 9148 switch is 8Gb speed only, so SFPs do not need to be replaced. The appropriate switch licenses must also be available.
- As always, check with the IMT to verify supported configurations, including ISL speeds. To determine which additional parts are required, NetApp recommends that you create a quotation for a new MetroCluster configuration and compare the features generated with the hardware available.

Data ONTAP licenses and entitlements must be converted to the correct clustered Data ONTAP configuration. To configure MetroCluster, all nodes must be wiped (zero all disks) and installed freshly with Data ONTAP 8.3.x/9.0, so all data must have been previously copied or transitioned.

Note: On Brocade 6505 switches, 16Gb SFPs are also required with MetroCluster 8.3.x/9.0. However, because this model is not supported with 7-Mode FMC, it is not a consideration for equipment reuse.

Last update: 2017-10-30 22:46

(NetApp Confidential - Limited Use) Nabil Fares | 01-05-2018 21:41

Architecture

How can existing clustered Data ONTAP customers transition to MetroCluster?

Transitioning from clustered Data ONTAP requires data migration to a separate complete MetroCluster configuration; in-place transition is not available. This requirement means that you cannot convert an existing clustered Data ONTAP configuration with data into MetroCluster; if any SVMs are present on the cluster, the metrocluster configure command fails. Furthermore, any nodes that are reused must be wiped (zero all disks) and reinitialized to install Data ONTAP 8.3.x for MetroCluster.

SnapMirror can be used to transition data from a clustered Data ONTAP cluster to a MetroCluster configuration. However, 32-bit data (volumes or Snapshot copies) cannot be copied with SnapMirror; for more information, see the 7MTT section.

Application- and client-level methods, such as rsync or VMware Storage vMotion, can also be used to migrate data from a clustered Data ONTAP environment to MetroCluster.

Last update: 2017-10-30 22:52

(NetApp Confidential - Limited Use) Nabil Fares | 01-05-2018 21:41

Architecture

Is there a nondisruptive transition from clustered Data ONTAP to MetroCluster?

No. Disruption of applications is required when transitioning unless an application-specific nondisruptive method is used. The length of the disruption depends on the method that is used to migrate the data and how much manual reconfiguration is required.

Last update: 2017-10-30 22:52

(NetApp Confidential - Limited Use) Nabil Fares | 01-05-2018 21:41

Architecture

Can 7MTT be used to transition from clustered Data ONTAP to MetroCluster?

7MTT does not support transition from clustered Data ONTAP to MetroCluster. It is for source systems that are running 7-Mode only.

Last update: 2017-10-30 22:53

(NetApp Confidential - Limited Use) Nabil Fares | 01-05-2018 21:41

Architecture

Can nodes that were previously running another Data ONTAP release be reused for MetroCluster 8.3.x?

Yes, the nodes can be reused, as long as the hardware is supported with 8.3.x (including four identical controllers). In addition, all the required additional hardware for MetroCluster 8.3.x must be in place, including switches, additional storage, FibreBridges if required, FC-VI cards, and FC initiator ports. All nodes must be wiped (zero all disks) and installed freshly with Data ONTAP 8.3.x.

Last update: 2017-10-30 22:53

(NetApp Confidential - Limited Use) Nabil Fares | 01-05-2018 21:41

Configuration

Does System Setup support MetroCluster?

Yes, System Setup can be used to create the initial clusters for supported platforms. The CLI is used for the steps that are specific to MetroCluster, such as mirroring the aggregates, creating the MetroCluster configuration, and configuring the health monitors. You can perform other steps, such as cluster peering and creating intercluster LIFs, by using OnCommand System Manager or the CLI. For detailed steps to set up MetroCluster, see the MetroCluster Installation and Configuration Guide in the NetApp product documentation

Last update: 2017-10-30 21:22

(NetApp Confidential - Limited Use) Nabil Fares | 01-05-2018 21:41

Configuration

How can MetroCluster be monitored?

MetroCluster includes health monitors for the components, including switches and FibreBridges as applicable. OnCommand Unified Manager 6.3 and OnCommand Performance Manager 2.0 also support MetroCluster 8.3.x. This support represents a substantial functionality improvement over fabric and stretch MetroCluster, which did not have management tool support. OnCommand Balance 4.2 and later (for Data ONTAP 8.3.x) does not support MetroCluster configurations.

Last update: 2017-10-30 21:22

(NetApp Confidential - Limited Use) Nabil Fares | 01-05-2018 21:41

Configuration

Is there an easy way to configure the fabric switches?

Golden configuration files (reference configuration files) for the Brocade 6505 and 6510 and the Cisco 9148, 9148S, and 9250i switches are available for download from the NetApp Support site. The files contain the required commands to automatically configure the switches.

Last update: 2017-10-30 21:26

(NetApp Confidential - Limited Use) Nabil Fares | 01-05-2018 21:41

Configuration

How many ports for ISLs and stacks are included in the switch golden configuration files?

Four ISL ports are configured. For the 6510 and 9148/9148S/9250i, ports for four storage stacks are configured. For the 6505, two storage stack ports are configured. For the 6505, then, ports 6 and 7 are assigned for storage attachment, and ports 8, 9, 10, and 11 are assigned for ISLs. This setup then requires only one PoD license (12 ports). If more than two stacks and fewer than four ISLs are required, ISL ports can be reconfigured for storage. In that case, manual setup is required. If four ISLs and more than two stacks are required, an additional PoD license is necessary. For information about the options for the 6505, see the following knowledge base article

https://kb.netapp.com/support/index?page=content&actp=LIST&id=1015278.

Last update: 2017-10-30 21:26

(NetApp Confidential - Limited Use) Nabil Fares | 01-05-2018 21:41

Configuration

How is MetroCluster configured at initial setup?

Setup and configuration of MetroCluster are covered in detail in the MetroCluster Installation and Configuration Guide in the NetApp product documentation. The MetroCluster Installation Express Guide is also available, which is appropriate for factory-configured hardware with the default settings. As a rule, the clusters are shipped preconfigured from the factory, with the disks assigned equally across all nodes, Data ONTAP installed, switches and FibreBridges configured (as applicable), clusters peered, and MetroCluster configured. It is required only to change the IP addresses of the management LIFs to match the customer's network. If it is required or preferred to install from scratch, follow the process in the MetroCluster Installation and Configuration Guide.

For a scratch installation, rack and cable the hardware, assign disk ownership, configure the switches and FibreBridges, install Data ONTAP, create the clusters. In eight-node and four-node configurations enable HA. Then execute the following steps.

Note: These steps are a summary only; follow closely the detailed process in the MetroCluster Installation and Configuration Guide:

1. Create intercluster LIFs and define cluster peering relationships. This step is required for the cluster configuration replication.
2. Mirror the root aggregate on each node by using the storage aggregate mirror command.
3. If you use the default setup option, in an eight-node or four-node configuration, create a mirrored data aggregate on each node; in a two-node configuration, create two mirrored data aggregates on each node. If you use the advanced mode option to configure with a single data aggregate per cluster, only one mirrored data aggregate per node is required.
4. Run the metrocluster configure command on one of the clusters to create the MetroCluster relationship. This command configures both clusters for MetroCluster. Two MDVs are created on each cluster to store the configuration replication information. By default, each MDV is on a separate data aggregate; otherwise, if you use the advanced option, both MDVs for each cluster are created on the same data aggregate. The command also sets up and initializes the NVRAM and configuration replication relationships between the DR partners.
5. Verify the configuration with the metrocluster check command. Also run Config Advisor to check cabling and other components.
6. Create SVMs and populate them as desired.
7. Test switchover and switchback.

Last update: 2017-10-30 21:31

(NetApp Confidential - Limited Use) Nabil Fares | 01-05-2018 21:41

Configuration

How is the DR partner node chosen in an eight-node and four-node configuration?

Each node’s DR partner is automatically selected during execution of the metrocluster configure command, based on its system ID (NVRAM ID). The lower-ordered node in one HA pair is DR-partnered with the corresponding lower-ordered node in the other cluster, and so on. The DR partner assignment cannot be changed after the initial configuration. Particularly if the nodes in an HA pair are configured with different storage, check that the two nodes with lower system IDs in each cluster have a matching disk configuration. Perform the same check for the two nodes with higher system IDs.

Adjust the disk ownership before the initial installation (before running the metrocluster configure command) to confirm that the DR partners are assigned correctly. The assignment of DR partners also affects the ports that LIFs use on switchover; in normal circumstances, LIFs switch over to their DR partner node. For more information about the behavior of LIFs on switchover, see the section “Networking and LIF creation guidelines for MetroCluster configurations” in the MetroCluster Installation and Configuration Guide.

Last update: 2017-10-30 21:31

(NetApp Confidential - Limited Use) Nabil Fares | 01-05-2018 21:41

Configuration

What are the default passwords for hardware shipped from the factory?

The preset passwords for controllers and the preset SP, cluster interconnect switches, back-end fabric switches, FibreBridges, and cluster peering passphrases are listed in the MetroCluster Installation Express Guide.

Last update: 2017-10-30 21:32

(NetApp Confidential - Limited Use) Nabil Fares | 01-05-2018 21:41

Configuration

What configurations are available for two-node stretch MetroCluster?

There are two 2-node stretch MetroCluster configurations. The direct-attached configuration connects the controllers and disk shelves directly by using optical or copper SAS cables. The bridge-attached configuration connects the controllers and disk shelves by using ATTO FibreBridges. Mixing direct-attached and bridge-attached SAS connections is not supported.

For more information, see the Optical SAS SE Technical Presentation on the Field Portal.

Last update: 2017-10-30 21:32

(NetApp Confidential - Limited Use) Nabil Fares | 01-05-2018 21:41

Configuration

Can non-MetroCluster nodes can co-exist within the same cluster as MetroCluster nodes?

No, the entire cluster must be MetroCluster only.

Last update: 2017-10-30 21:33

(NetApp Confidential - Limited Use) Nabil Fares | 01-05-2018 21:41

Configuration

Can a MetroCluster configuration be returned to a configuration without MetroCluster?

MetroCluster can be returned to a standard clustered Data ONTAP with the assistance of NetApp Support. Returning to clustered Data ONTAP without MetroCluster:

- Stops all SyncMirror replication
- Deletes the remote plexes
- Changes the SVMs back to the nonreplicated type
- Deletes CRS replicated objects in the RDB
- Removes the DR protection and ability to switch over

It does not remove or alter any user data in the SVMs, however; all data is accessible from the original HA pair after the switchover.

Note: Decommissioning MetroCluster is a one-way operation. If you want to subsequently reenable MetroCluster, you must first zero all drives and reinitialize all the nodes.

Last update: 2017-10-30 21:35

(NetApp Confidential - Limited Use) Nabil Fares | 01-05-2018 21:41

Configuration

How are switchover and switchback initiated?

Switchover and switchback operations are initiated by the CLI. There is one command to switch over. By default, the switchover command executes a planned switchover; switchover on disaster is initiated by using a flag on the switchover command. Three commands are required to perform a switchback. Switchback is always a negotiated operation. Switchover and switchback operations are described in the MetroCluster Management and Disaster Recovery Guide in the NetApp product documentation.

Last update: 2017-10-30 21:35

(NetApp Confidential - Limited Use) Nabil Fares | 01-05-2018 21:41

Configuration

When is automatic switchover initiated in the two-node, four-node, and eight-node MetroCluster configurations?

In two-node configurations, hardware failure or panic of one of the nodes triggers an automatic switchover, similar to the behavior of FMC and SMC. In a four-node and eight-node configurations, Automatic Switchover is performed when all the nodes in an HA-group go down. Automatic switchover occurs only if the local storage (in particular, the root aggregate of the failed node) is available. If a disaster affects all the hardware, including the storage, then automatic switchover is not performed.

For both two-node, four-node, and eight-node configurations, you must run the Tiebreaker is software in automatic switchover mode in the event of a site disaster. See section 5 for more information about the MetroCluster Tiebreaker software.

Last update: 2017-10-30 21:36

(NetApp Confidential - Limited Use) Nabil Fares | 01-05-2018 21:41

Configuration

Does Automatic switchover require a Product Variance Request (PVR)?

No – Automatic switchover is now integrated into ONTAP 9.0 and doesn’t need a PVR. However, this only handles controller failures while the storage is still accessible. If an Automatic Switchover is needed to handle Site disaster you need to deploy Metrocluster Tiebreaker Software in “observer-mode false”.

Automatic Switchover using the tiebreaker still needs PVR.

Last update: 2017-10-30 21:37

(NetApp Confidential - Limited Use) Nabil Fares | 01-05-2018 21:41

Configuration

What is the difference between negotiated switchover and switchover on disaster?

By default, the metrocluster switchover command runs as a negotiated switchover. In a negotiated switchover, both sites are active, and the switchover is a clean operation because both local and remote plexes are available. NVRAM can be flushed to disk on the source plexes before the switchover so that NetApp WAFL® (Write Anywhere File Layout) replay is not necessary on the remote plexes. Negotiated switchover is useful for test purposes or when it is known in advance that a site or all ISL links will become unavailable.

Switchover on disaster (forced switchover) is performed by specifying a flag on the switchover command. The nodes, switches, and storage on the site that is being switched over must be powered down or otherwise disconnected from the surviving site before the switchover is executed. The switchover proceeds without access to the source plexes. Switchover on disaster takes longer than a negotiated switchover because additional steps are required, including WAFL replay.

The time needed for detection of a disaster and for an administrator to follow the institutional procedure to declare and initiate a disaster must be factored in. These considerations are outside of the control of the switchover command and affects the ability to perform a switchover nondisruptively to applications. If Tiebreaker is used in automatic mode (with PVR approval), detection and switchover proceed without human intervention, and the switchover time is predictable to complete nondisruptively for applications.

Note: All switchovers are disruptive to all SMB/CIFS applications, including SMB 3.0.

Last update: 2017-10-30 21:38

(NetApp Confidential - Limited Use) Nabil Fares | 01-05-2018 21:41

Configuration

Is it possible to perform a switchover test without actually switching over any objects?

Yes. MetroCluster includes an option (-simulate) on the switchover and switchback commands in advanced mode that performs essentially a dry run for the switchover and switchback operations. It invokes all the processing and health checks to verify that the operation can be performed, including testing for any conditions that can cause the operation to be vetoed. It terminates before any operations are committed and reports success or failure.

Last update: 2017-10-30 21:39

(NetApp Confidential - Limited Use) Nabil Fares | 01-05-2018 21:41

Configuration

Is it possible to perform an automatic switchover on disaster?

Automatic switchover on disaster is now integrated within MetroCluster. However, it must have access to remote storage in order to perform a switchover. The MetroCluster configurations (and all similar solutions from other vendors) cannot correctly arbitrate a switchover in a scenario in which all links between the sites are disabled but both sites remain operational. Because neither site is able to contact the other, each site could attempt to switch over, resulting in a split-brain scenario in which both sites are active on the same plexes. For this reason, a third site is required to correctly determine whether one site is actually down or whether neither site can contact the other. The optional NetApp MetroCluster Tiebreaker software is available that runs on a third site. See section 5 for more information about Tiebreaker software.

Switchover is automatic if all of the nodes in a cluster fail: for example, due to a hardware failure or panic. Because mailbox access on both nodes is required for an automatic switchover, the failed node’s storage must remain available.

Last update: 2017-10-30 21:39

(NetApp Confidential - Limited Use) Nabil Fares | 01-05-2018 21:41

Configuration

What happens if the cluster peering network experiences an interruption?

Cluster configuration changes are logged in the metadata volume (MDV) on the cluster that is performing the update. Changes are not committed to the local RDB until the logging is complete. Updates are then propagated near synchronously to the other cluster’s RDB over the cluster peering network. If changes cannot be propagated because of temporary errors in the cluster peering network, after connectivity is restored, the changes are automatically sent to the other cluster by replaying the stored changes in the MDV.

If an unplanned switchover is necessary when the cluster peering network is down and there are unpropagated RDB updates, the updates are processed from the mirrored copy of the MDV at the surviving site. For resiliency, NetApp recommends redundant networks for the cluster peering network. If the cluster peering network is unavailable, health monitor alerts and EMS messages are sent, and planned switchover is not possible until at least one link is restored.

Last update: 2017-10-30 22:31

(NetApp Confidential - Limited Use) Nabil Fares | 01-05-2018 21:41

Configuration

Does epsilon play a role in MetroCluster availability?

No. MetroCluster 8.3.0 uses two-node clusters, and there is no epsilon in two-node clusters. In two-node, each cluster is a single-node cluster; therefore, there is also no epsilon node designation. For eight-node MetroCluster, epsilon does play a role in determining which sections of cluster continue serving data. It is similar to a 4-node cluster behavior.

Last update: 2017-10-30 22:32

(NetApp Confidential - Limited Use) Nabil Fares | 01-05-2018 21:41

Interoperability

What capabilities does OCUM provide for MetroCluster?

Starting in version 6.2, OnCommand Unified Manager provides a graphical display of the MetroCluster topology. It also provides monitoring and alerting for all MetroCluster components, including the ISL and IP links and the switches, bridges, and storage. It is intended to supplement and augment existing enterprise monitoring tools. OCUM receives alerts from the MetroCluster health monitor and displays probable causes, effects, and suggested corrective actions.

NetApp recommends OnCommand Unified Manager 6.3 as the minimum version for monitoring and alerting of MetroCluster components

Last update: 2017-10-30 21:10

(NetApp Confidential - Limited Use) Nabil Fares | 01-05-2018 21:41

What events related to MetroCluster cause a health monitor alert?

To display the details of available health monitor alerts, use the following commands:

system health alert definition show -subsystem MetroCluster

system health alert definition show -subsystem MetroCluster_Node

Last update: 2017-10-30 21:11

(NetApp Confidential - Limited Use) Nabil Fares | 01-05-2018 21:41

Interoperability

Does System Manager support MetroCluster?

OnCommand System Manager can be used for normal cluster configuration such as creating and displaying cluster peering relationships, SVMs, volumes, LUNs, and data access protocols. System Manager does not support discovery or display of MetroCluster relationships or configuration specific to MetroCluster; however, some events that are related to MetroCluster are displayed. System Manager does not provide the capability to initiate switchover and switchback operations

Last update: 2017-10-30 21:12

(NetApp Confidential - Limited Use) Nabil Fares | 01-05-2018 21:41

Interoperability

Is Tiebreaker available for MetroCluster?

Yes. Tiebreaker capability is available for MetroCluster (via PVR). To download the software plus the installation guide and information about the software prerequisites, go to the software downloads section of the NetApp Support site at http://mysupport.netapp.com/NOW/cgi-bin/software/, then select MetroCluster Tiebreaker. No additional Data ONTAP license is required for the Tiebreaker software.

The capability known as NetApp MetroCluster Tiebreaker software is a standalone application that runs on a Linux host. Tiebreaker software enables detection of split-brain situations in which each site is isolated from the other but is otherwise operational. Tiebreaker software is supported by NetApp.

Tiebreaker software operates in observer mode and can detect and send an alert if a disaster that requires switchover has occurred. The switchover then can be issued manually by the administrator. With a PVR, the Tiebreaker software can be configured for automatic switchover on disaster.

The switchover time within the client/host has RTO <= 120 seconds

NOTE:

1. For CIFS, TBUSO is no different from USO. CIFS is disruptive across SO/SB. CIFS hosts re-connect post SO/SB.
2. Host I/O may time out during USO
3. ONTAP support not available
4. Testing required before PVR can be approved
5. All Tie Breaker configurations are PVR only
6. Intermittent failures with Solaris nSO and SB, where the zpool gets into degraded state after few iterations of nSO/SB. We had tested Solaris with only zpool config (Not SVM / metasets).
7. AIX testing was on bare metal and not VIOS
8. Supported for non-MetroCluster configurations

Supported Operating systems with Tiebreaker:

- AIX 7.1 TL4
- ESX 5.5
- RHEL6 U7
- RHEL7 U2
- Windows 2012 R2 (with Windows Failover Cluster – WFC)

Last update: 2017-10-30 21:17

(NetApp Confidential - Limited Use) Nabil Fares | 01-05-2018 21:41

Interoperability

Does switchover work if the cluster is not in quorum?

The switchover completes if the cluster being switched over (the down site) is out of quorum. However, if the cluster doing the switchover (the site being switched over to) is out of quorum, the switchover fails.

Note: In the event of an outage, Tiebreaker initiates a switchover regardless of the quorum status of the clusters. If the cluster that is being switched over is out of quorum, however, the switchover will not complete.

Last update: 2017-10-30 21:19

(NetApp Confidential - Limited Use) Nabil Fares | 01-05-2018 21:41

Interoperability

How do SnapMirror and SnapVault interoperate with MetroCluster?

Volumes in MetroCluster can be a SnapMirror or a SnapVault source or target. To allow replication to continue after a switchover or a switchback, peering relationships with the clusters without MetroCluster must be created for both MetroCluster clusters. Any replication tasks that are in progress when a switchover or a switchback occurs terminate. You can run SnapMirror or SnapVault operations only from the cluster that owns the volume. Volumes are online only at one cluster, and the other cluster cannot access the volumes unless a switchover is performed.

If MetroCluster volumes are a SnapMirror or SnapVault **source**, the peering relationships are automatically updated on switchover or switchback, and replication resumes automatically at the next scheduled time. Manually initiated replication operations must be explicitly restarted. For example, consider a volume in an SVM on cluster A that is being replicated with SnapMirror to a cluster outside the MetroCluster configuration. If cluster A switches over to cluster B, the volume is then replicated from cluster B to the destination cluster. On switchback, the replication returns to its normal operation, from cluster A to the destination cluster.

Another case is when the MetroCluster volumes are a SnapMirror or SnapVault **destination** (for example, volumes from a cluster outside the MetroCluster configuration replicated to a destination volume on one of the MetroCluster clusters). In that case, the peering relationship must be verified and re-created if necessary after every switchover or switchback. Also, all such SnapMirror and SnapVault relationships must be manually re-created after every switchover or switchback. A SnapMirror or SnapVault rebaseline is not required. A WFA workflow, “Re-create SnapMirror and SnapVault protection after MetroCluster switchover and switchback,” is available to automate the re-creation of such relationships.

Last update: 2017-10-30 21:20

(NetApp Confidential - Limited Use) Nabil Fares | 01-05-2018 21:41

Interoperability

Is SnapLock Enterprise supported in MetroCluster?

Yes. Starting in ONTAP 9 SnapLock Enterprise is supported in MetroCluster.

Last update: 2017-10-30 21:20

(NetApp Confidential - Limited Use) Nabil Fares | 01-05-2018 21:41

Interoperability

Is SnapLock Compliance supported in MetroCluster?

No. SnapLock Compliance is not supported.

Last update: 2017-10-30 21:21

(NetApp Confidential - Limited Use) Nabil Fares | 01-05-2018 21:41

Requirements

Does an MCC-IP require the FCVI adapters?

No, MCC-IP controllers use a new specialed ethernet adapter for NVRAM and SyncMirror replications. The adapter is an off-the-shelf product manufactured by Chelsio, their part number is knowing as T6 adapter and NetApp's part number is X91146A.

Last update: 2017-12-12 16:34

(NetApp Confidential - Limited Use) Nabil Fares | 01-05-2018 21:41

Requirements

What additional hardware needed for an MCC-IP cluster?

MCC-IP requires the following hardware:

- Interconnect switches for local and remote replication - X190001 (Cisco 3132Q-V)
- iWARP/RDMA Ethernet adapter - X91146A (Chelsio T6)

For controller specification and sizing please refer to the SPM and IMT tools.

Last update: 2017-12-12 16:39

(NetApp Confidential - Limited Use) Nabil Fares | 01-05-2018 21:41

Requirements

Which controllers supported with MCC-IP as of 9.3?

The only supported controllers with the initial MCC-IP release (9.3) are:

- AFF A700
- FAS 9000

Always refer to the IMT Tool for the latest information.
https://mysupport.netapp.com/matrix

Last update: 2017-12-12 22:19

(NetApp Confidential - Limited Use) Nabil Fares | 01-05-2018 21:41

Requirements

Which shelves are supported with MCC-IP?

Depending on the controller, these are the supported shelves:

- AFF A700
  - DS2246
  - DS224C
- FAS 9000
  - DS212C
  - DS2246
  - DS224C
  - DS4246
  - DS460C

Last update: 2017-12-12 23:29

(NetApp Confidential - Limited Use) Nabil Fares | 01-05-2018 21:41

Overview

What are the differences between MC-IP and MC-FC?

MC-IP is an enhancement to MC over FC that extends the capabilities of MetroCluster so that it can work over native IP networks. The metrocluster commands that are familiar to users will continue to work as expected with some changes for MC-IP. The following metrocluster commands will continue to work as expected for MC-IP:

- metrocluster configure
- metrocluster unconfigure
- metrocluster show
- metrocluster node show
- metrocluster vserver
- metrocluster switchback

The following metrocluster commands will have some changes for MCC-IP:

- "metrocluster modify" for MCC-IP will not allow the enabling of AUSO (AUSO is not supported with MCC-IP with release 9.3).
- "metrocluster check" checks the major components of the configuration.
- "metrocluster interconnect" manages the FC-VI and iWARP for both MCC-FC and MCC-IP respectively.
- "metrocluster switchover" switches over storage and data Vservers. One specific difference is the remote PLEX will always be down/not available with MCC-IP.
- "metrocluster heal aggregates" resyncs storage prior to switchback. With MCC-IP, heal root needs to complete first.
- "metrocluster heal root-aggregates" is effectively a no-op for MCC-IP and is kept for compatibility with MCC over FC.

The following metrocluster commands will be new for MCC-IP:

- "metrocluster config" create commands are run before running "metrocluster configure" to configure the DR groups, network logical interfaces, and connections between partner nodes including the selection of the DR partner.
- "metrocluster config" delete commands are run after running "metrocluster unconfigure" to tear down the configuration that was setup by the "metrocluster config" create commands.
- "metrocluster config" show commands display the DR groups, network logical interfaces, and connections for the MetroCluster setup.

Last update: 2018-01-03 17:20

(NetApp Confidential - Limited Use) Nabil Fares | 01-05-2018 21:41

Overview

Does the DR switchover/switchback flow changes with MCC-IP?

The DR-workflow consists of 3 major Phases:

1. Switchover Phase: There are 2 types of Switchover workflows (Negotiated Switchover and Unplanned Switchover)
2. Healing phase: The Healing phase consists of two sub-phases
    1. Healing Root Aggregates: Resyn of the plexes for the root aggregate's.
    2. Healing Data Aggregates: Resync of the data aggregates. This includes the aggregates of both the local and remote clusters. The remote nodes need to be booted for this to be success-full.
3. Switchback.

Most of the DR-workflows remain unchanged in the IP Configuration. However, the head-as-a-target (visibility to the disks is accomplished by the remote controller acting as an iSCSI target) model means that the connectivity to the pool1 disks is contingent on the DR-partners being healthy. This changes a few things in the DR-workflows, mainly in the pre-healing/healing phases.

Since "heal aggregate" phase requires access to remote disks, in this config we will need the disaster nodes to boot up before healing is performed. In today's workflow (MCC-FC), this happens after "heal root-aggregates" phase is complete. In order to allow the disaster site nodes to boot up, the root-aggregate disks will have to be given back (heal-roots phase equivalent) prior to heal-aggregates. This is a deviation in the DR-workflows for IP and FC configs.

Last update: 2017-12-20 22:57

(NetApp Confidential - Limited Use) Nabil Fares | 01-05-2018 21:41

Architecture

Does MCC-IP require ATTO bridges or Fibre Channel switches?

MCC-IP does have any requirements for any fibre channel switches or bridges for fabric connectivity, fibre channel is only needed for frontend host connectivity if the customer requires it. MCC-IP fabric is purely Ethernet and IP based.

Last update: 2017-12-12 16:20

(NetApp Confidential - Limited Use) Nabil Fares | 01-05-2018 21:41

Architecture

How do shelves connect to an MCC-IP controller as opposed to an MCC-FC controller?

Shelves connected to an MCC-IP HA pair use SAS ports as traditionally done with non-MCC clusters, external connectivity via SAS bridges (ATTO) is no longer required.

Last update: 2017-12-12 16:29

(NetApp Confidential - Limited Use) Nabil Fares | 01-05-2018 21:41

Architecture

What is the procedure for and best practice around performing switchover and switchback for MCC-IP when unmirrored aggregates are involved?

Unmirrored aggregates are not supported with the initial release (9.3) of MCC-IP, therefore documentation of failure scenarios are not available.

Last update: 2017-12-12 16:54

(NetApp Confidential - Limited Use) Nabil Fares | 01-05-2018 21:41

Architecture

How does the MCC-IP architecture differ from MCC-FC architecture?

The MCC/IP architecture builds upon the fundamental constructs of the MCC/FC architecture, and seeks to address the following issues:

1. **Leverage the ubiquity of IP networks**: a synchronous DR solution developed to run on IP can be more widely deployed, allow deployment over longer distances as long as the applications can handle the increased IO latency.
2. **Reduce hardware footprint**: hardware such as FibreChannel bridges, FC-VI cards etc add cost and complexity. The IP based architecture will introduce the concept of the head as a target that will reduce cost, allow MCC support for new hardware with integrated storage etc.

A 4+ node configuration consists of HA-pair(s) in each cluster. The HA pair is based on shared storage. The new architecture, similar to the previous FC solution does require an IP (or FC) network exists with sufficient bandwidth to replicate the data. Diagnostic information available through HM, ASUP and network SLA monitoring tool(s) will provide information on latency/bandwidth information.

The high-level architectural constructs of MCC are not changing. Storage replication is still based on RAID sync-mirror. The NVlog replication will be based on an Ethernet-based RDMA transport.
This document proposes an architecture that will allow a synchronous DR solution to be constructed using Ethernet/IP as a transport. It includes two major parts:

1. Storage over IP (for e.g. using iSCSI)
2. NVRAM Mirroring over IP (for e.g. using iWARP/Software iWARP/RoCE)

For the first release of MCC over IP, iSCSI is being proposed for storage. The main reasons for the selection of iSCSI are that it is a standards based protocol for which there is widespread support in HW and SW. This will allow us to extend the MCC architecture to present head as a target, removing the need for a HW bridge device. It also allows for HW based performance acceleration using approaches such as iSCSI offload or iSCSI over RDMA (iSER).

The MCC/IP solution will implement NVlog replication using Ethernet based RDMA technologies such as iWARP or software iWARP. For internal deployments on VSIMs, routable MVRD will be used as the InterConnect. For software only environments such as cloud deployments, where routability is a requirement, software iWARP will be used.
The DR workflows also do NOT change. There are minor operational changes to these workflows that are documented in detail later in this document.
This architecture has no impact on client protocols (CIFS, NFS, SAN) and Vservers.

(NetApp Confidential - Limited Use) Nabil Fares | 01-05-2018 21:41

Architecture

Where can I find the MCC-IP architecture details?

The Functional Specs and architectural details are located behind the VED, the link is :

https://wikid.netapp.com/w/MCC_HN.0/MCC_FS

Last update: 2017-12-12 19:59

(NetApp Confidential - Limited Use) Nabil Fares | 01-05-2018 21:41

Architecture

How does replication work with MCC-IP?

MCC-IP uses iSCSI to replicate RSM (Raid SyncMirror) and IWARP to replicate NVRAM. The salient points of the new architectures are:

- Each node in a DR group acts as storage proxy (via an iSCSI Target) to the IP fabric.
- All replication planes use TCP/IP.

The IP Fabric and Filer Heads as SCSI Targets.
The main change in the MetroCluster architecture is driven by the fact that it eliminates the need for external hardware bridges to connect disks to the IP fabric. Each node in the DR group acts as a storage proxy or SCSI target that exports its embedded disks or directly attached disks to the other nodes in the DR group. iSCSI (SCSI over TCP/IP) is the storage transport protocol of choice for the IP fabric that allows an SCSI initiator and targets to communicate over a TCP/IP fabric. Each node in the DR group accesses its remote storage via an iSCSI initiator that establishes an iSCSI session with a remote DR partner iSCSI target.

The below diagram depicts the new IP fabric. Node B1 exports its locally attached disks to remote partners nodes in the DR group via an iSCSI target. Node A1 pool 0 disks are locally attached to node A1, while pool 1 remote disks are exported via the iSCSI Target hosted by B1. Aggregate AggrA1 local plex 0 is comprised of locally attached disks from pool 0. Aggregate AggrA1 remote plex 1 is comprised of disks directly attached to B1 and exported to A1 via the iSCSI Target hosted within B1.

(NetApp Confidential - Limited Use) Nabil Fares | 01-05-2018 21:41

Architecture

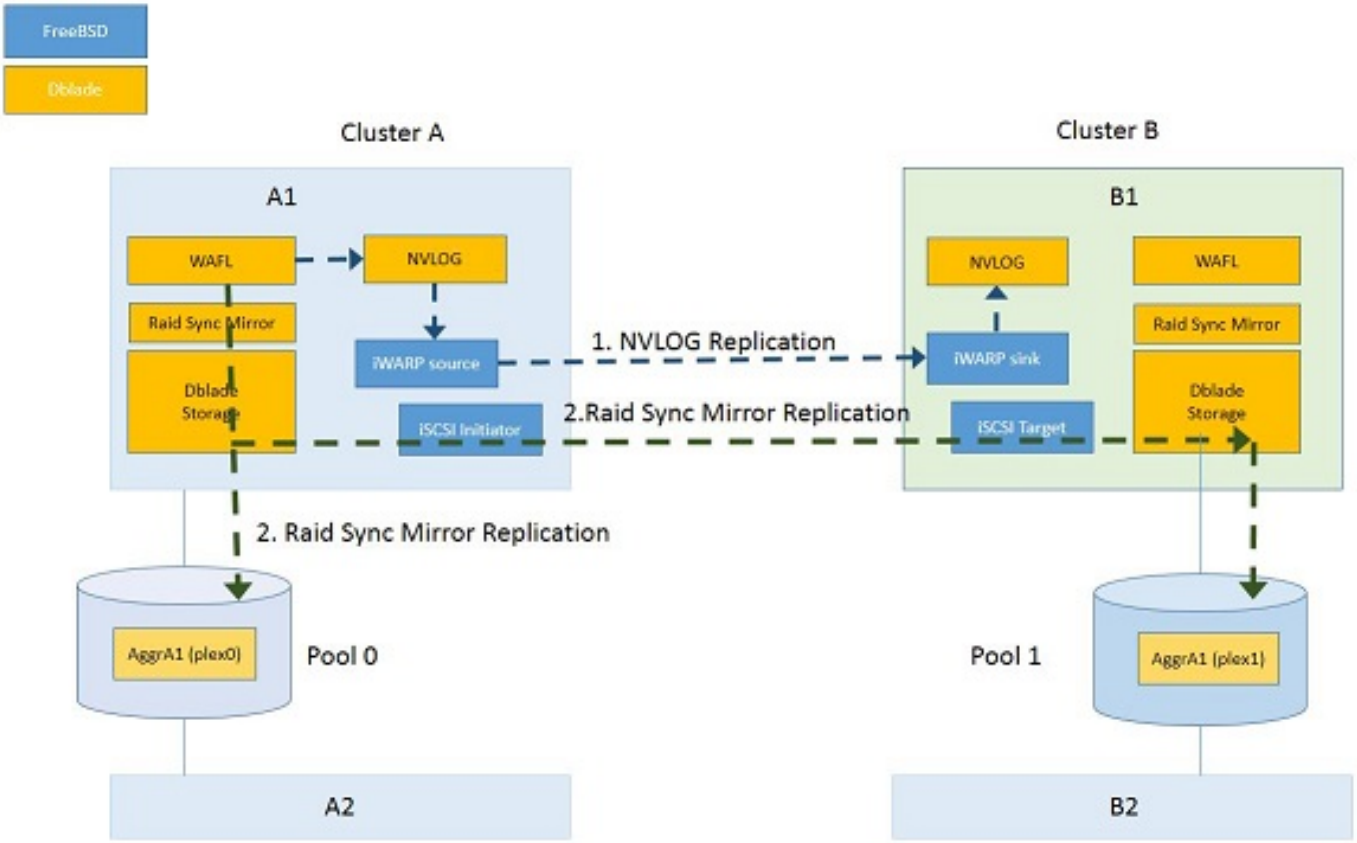

Last update: 2017-12-12 21:09

(NetApp Confidential - Limited Use) Nabil Fares | 01-05-2018 21:41

Architecture

Does the RAID SyncMirror (RSM) behavior change with MCC-IP?

RAID Sync Mirror behavior remains the same as in a traditional Fibre channel configs. When both the plexes are available the writes are mirrored to both and the reads are done from the local plex.
In case of mirror-degraded scenario, both the writes and reads are directed to the healthy plex, even that plex happens to be the remote (iSCSI) plex.

Last update: 2017-12-12 21:51

(NetApp Confidential - Limited Use) Nabil Fares | 01-05-2018 21:41

Does planned and unplanned switchover behavior change in MCC-IP?

The target exports the LUNs without any additional header. This results in Sanown seeing the same ownership on the intiator and target for the pool1 disks. On switchover, pool1 disks of the DR-partner are accessed locally to updated the sanown ownerships. The current/home/dr-home id modifications are the same as a Fibre channel config.
Both the Negotiated and Unplanned Switchover workflow remains unchanged. Since the Disks of the remote pool (pool1) are not accessible while the disaster site nodes are down, all the switched over aggregates will be mirror degraded. Unmirrored aggregates will not be available in Switchover mode until heal-aggregates is complete.

Negotiated Switchover
The negotiated switchover workflow is split into source(disaster) and destination(DR) site.
The Source Site quiesces the client access, unmounts the volumes and aggregates and changes the ownership of all the data disks(both pools) over to the Surviving site. This remains unchanged. The root-aggregate disk's ownerships are unchanged at this point.
The destination site assimilates the DR-aggregates and volumes and restores the client access after starting the Vservers.

Unplanned Switchover
In-case of Unplanned Switchover, the DR-site nodes change the ownership of all the DR-partner disks (root/data) visible to it. In the IP Config, this only means Pool1 disks, since the pool0 disks are not accessible as the disaster nodes are down. There is no IP specific change in this workflow.

Asynchronous Switchover handling
In Switchover mode, the asynchronous Switchover workflow periodically polls for any left-behind DR-partner pool1 disks. In case of the NSO, this workflow changes the ownership of the root-aggregate pool1 disks. In the IP config, we want the disaster site node to boot before the "heal-aggregates" phase can be run. This requires us to giveback the root-aggregate disks back to disaster site nodes.

In Switchover mode, the root-aggregate is degraded (pool1 only) and is in offline state. The Asynchronous Switchover handling will identify the root-aggregate disks belonging to the Disaster site and changing the ownerships back. This should follow the workflow similar to today's "heal root-aggregate" phase. The Disaster site while booting up should see both the pool0 and pool1 disks for the root-aggregate and there should be no resync needed.

(NetApp Confidential - Limited Use) Nabil Fares | 01-05-2018 21:41

Architecture

Last update: 2017-12-12 22:07

(NetApp Confidential - Limited Use) Nabil Fares | 01-05-2018 21:41

Configuration

How does the configuration change for MCC-IP vs MCC-FC?

These are the high-level steps for preparing and configuring an MCC-IP cluster:

1. Setting MCC/IP platform parameters & Cluster Configuration.
   Note: If the system was bought as a MCC-IP system, this is done by manufacturing prior to the system being shipped.
2. Peering the two MCC clusters
3. Configuring the MCC IC LIFs that transport the various classes of replicated traffic.
4. Configure the storage/RDMA IP network components of the DR groups.
5. Setting disk ownership

These steps conceptually mirror the Fibre Channel fabric setup where Filers, FC/SAS Bridges, and switches are interconnected and configured to form a DR-group. While step 1, 2 are the same as for the FC fabric setup, only step 3 and 4 are specific to the IP fabric setup.
The IP Fabric setup phase is a pre-requisite to the configuration phase.

Last update: 2017-12-19 16:49

(NetApp Confidential - Limited Use) Nabil Fares | 01-05-2018 21:41

Interoperability

List of features not currently supported with MCC-IP in ONTAP 9.3.

These features and functionality are not supported with the initial (9.3) MCC-IP release:

- Shared IP links
- Layer3 networks
- Shared Layer2 networks
- FlexGroups
- Flash Pool
- NVE
- NSE
- ADP
- Unmirrored Aggregates
- Automatic Unplanned Switch Over (AUSO)
- 2node MCC-IP
- 8Node MCC-IP

Last update: 2017-12-19 16:47

(NetApp Confidential - Limited Use) Nabil Fares | 01-05-2018 21:41

Interoperability

What is the shelf stack size for MCC-IP with 9.3?

The following table lists the controller, shelf, and the maximum stack size. Refer to the Hardware Universe Tool for the latest and updated details.

Controller	Shelf Type	Stack Size
AFFv A700	DS2246	4
AFF A700	DS224C	4
FAS 9000	DS2246	10
FAS 9000	DS4246	10
FAS 9000	DS212C	10
FAS 9000	DS224C	10
FAS 9000	DS460C	4

Last update: 2017-12-13 00:36

(NetApp Confidential - Limited Use) Nabil Fares | 01-05-2018 21:41

Cisco

What model number is used for the replication switch?

NetApp’s model number is X190001 and Cisco’s is Nexus 3132Q-V.

Last update: 2017-12-11 21:54

(NetApp Confidential - Limited Use) Nabil Fares | 01-05-2018 21:41

Cisco

Can the customer provide their replication switch, even the same model?

No, this option is not supported at this time.

Last update: 2017-12-11 21:55

(NetApp Confidential - Limited Use) Nabil Fares | 01-05-2018 21:41

Cisco

What is the purpose of the replication switch?

The switch historically provided ONTAP cluster interconnect capabilities, with MCC-IP its features extended to provide inter-site replication as well. The switch serves both local and remote replication.

The cluster traffic and the HA/MetroCluster traffic is in separate VLANs to prevent the cluster traffic from going between the 2 sites.

Last update: 2017-12-19 16:45

(NetApp Confidential - Limited Use) Nabil Fares | 01-05-2018 21:41

Cisco

What optics are supported by the X190001 (Nexus 3132Q-V) switch?

Refer to the IMT for supported optics connected qualified by NetApp for controller connectivity, for fabric connectivity all optics supported by Cisco are valid.

Last update: 2017-12-11 21:58

(NetApp Confidential - Limited Use) Nabil Fares | 01-05-2018 21:41

Cisco

Can the switch be used for fabric and front-connectivity?

No, the switch is dedicated for MCC-IP fabric replication only.

Last update: 2017-12-11 21:58

(NetApp Confidential - Limited Use) Nabil Fares | 01-05-2018 21:41

Cisco

Can the switch be shared with non-MCC-IP clusters?

No, at the initial release of MCC-IP mixing MCC and non-MCC clusters on the same switches is not supported.

Last update: 2017-12-19 16:42

(NetApp Confidential - Limited Use) Nabil Fares | 01-05-2018 21:41

Cisco

Where can I find the switch Reference Configuration Files (RCF)?

The files are available on NetApp’s support site under the download section, MetroCluster RCF.

Last update: 2017-12-19 16:40

(NetApp Confidential - Limited Use) Nabil Fares | 01-05-2018 21:41

Cisco

What port speeds supported on the X19001 (Nexus 3132Q-V) switch?

The switch supports 40G ethernet natively and 10G ethernet via breakout cables, additional configuration is required to leverage breakout cables.

Last update: 2017-12-11 22:03

(NetApp Confidential - Limited Use) Nabil Fares | 01-05-2018 21:41

Cisco

I want to know more about the interconnect switch and its features, where can I get the information?

Additional information is available on Cisco's website, the link to the switch's datasheet is:

https://www.cisco.com/c/en/us/products/switches/nexus-3132q-v-switch/index.html

Last update: 2017-12-11 22:04

(NetApp Confidential - Limited Use) Nabil Fares | 01-05-2018 21:41

Cisco

What optics needed between the X190001 (3132Q-V) switch and NetApp controllers?

Please check the IMT, however, typically shortwave optics or TWINAX cables are needed.

Last update: 2017-12-11 22:05

(NetApp Confidential - Limited Use) Nabil Fares | 01-05-2018 21:41

Cisco

What optics do I need for the MCC-IP ISLs?

The optic type depends on the distance between the two sites and whether xWDM equipment is used, it’s possible to use shortwave optics if connectivity between the switches and xWDM equipment. The optics is selected based on the fabric design.

Last update: 2017-12-11 22:06

(NetApp Confidential - Limited Use) Nabil Fares | 01-05-2018 21:41

Cisco

Does the X190001 (3132Q-V) switch support SSH for management?

Yes, both SSH and Telnet are supported by default without additional licenses.

Last update: 2017-12-11 22:07

(NetApp Confidential - Limited Use) Nabil Fares | 01-05-2018 21:41

Cisco

Does the X190001 (3132Q-V) switch require additional licenses for MCC-IP?

No, licensing is not required to support MCC-IP.

Last update: 2017-12-11 22:08

(NetApp Confidential - Limited Use) Nabil Fares | 01-05-2018 21:41

Cisco

Are all ports available for use on the X190001 (3132Q-V)?

The switch has 32 ports, 24 only enabled by NetApp to ensure rate level switching and proper buffer allocation to minimize packet drops. The remaining ports are disabled when the RFC file is loaded.

Last update: 2017-12-11 22:14

(NetApp Confidential - Limited Use) Nabil Fares | 01-05-2018 21:41

Cisco

What is the minimum number of MCC-IP ISL required per fabric?

The minimum supported is one 10Gb ISL link per fabric, however, this is assuming the customer’s Host WriteIO does not exceed this capacity. It’s best to consult the IMT tool, SPM and manually calculate the customer’s requirement for proper ISL sizing per fabric.

Last update: 2017-12-11 22:16

(NetApp Confidential - Limited Use) Nabil Fares | 01-05-2018 21:41

Cisco

Does the interconnect switch X190001 (Nexus 3131Q-V) support data encryption over the fabric?

No, the X190001 is not capable of encrypting the data before forwarding to the fabric. If data encryption is required, the recommended option is deploying a xWDM with encryption capabilities.

Last update: 2017-12-19 16:38

(NetApp Confidential - Limited Use) Nabil Fares | 01-05-2018 21:41

Networking

What is the minimum supported MCC-IP ISL size/speed?

The minimum supported speed per ISL is 10Gb.

Last update: 2017-12-11 22:15

(NetApp Confidential - Limited Use) Nabil Fares | 01-05-2018 21:41

Networking

What is the maximum distance supported with MCC-IP?

The initial release with 9.3 the maximum distance is 100km.

Last update: 2017-12-11 22:16

(NetApp Confidential - Limited Use) Nabil Fares | 01-05-2018 21:41

Networking

What is the maximum latency supported with MCC-IP?

The initial release with 9.3 the maximum latency is 1ms.

Last update: 2017-12-11 22:16

(NetApp Confidential - Limited Use) Nabil Fares | 01-05-2018 21:41

Networking

What is the maximum distance supported natively on the X190001 (3132Q-V) switch without xWDM hardware?

The Nexus 3132Q-V supports up to 40km without xWDM, anything beyond 40km requires proper Long Wave (LW) optics.

Last update: 2017-12-19 16:36

(NetApp Confidential - Limited Use) Nabil Fares | 01-05-2018 21:41

Networking

Which xWDM is supported with MCC-IP?

MCC-IP doesn’t have dependency on xWDM hardware, therefore the customer can select their preferred vendor.

Last update: 2017-12-11 22:23

(NetApp Confidential - Limited Use) Nabil Fares | 01-05-2018 21:41

Networking

Is there a list of supported xWDM vendors for the X190001 (Nexus 3132Q-V)?

Please refer to the xWDM vendor’s compatibly website to ensure the Nexus 3132Q-V and Cisco’s optics are supported.

Last update: 2017-12-11 22:24

(NetApp Confidential - Limited Use) Nabil Fares | 01-05-2018 21:41

Networking

Is Layer3 routing required for MCC-IP between sites?

No, at the initial release (9.3) MCC-IP is supported with Layer2 stretch only, VLANs are stretched/bridged between the two sites over the ISLs. Each fabric has a dedicated VLAN to segregate the traffic properly end-to-end.

Last update: 2017-12-11 22:25

(NetApp Confidential - Limited Use) Nabil Fares | 01-05-2018 21:41

Networking

How many VLANs are needed for the MCC-IP interconnect switches?

An MCC-IP deployment requires three VLANs, one VLAN is locally isolated and two VLANs are extended between the two sites.

Last update: 2017-12-11 22:26

(NetApp Confidential - Limited Use) Nabil Fares | 01-05-2018 21:41

Networking

Can the customer select the VLAN numbers for the MCC-IP interconnect switches?

The fabric VLANs can be selected by the customer, however, the local VLAN, which is VLAN 1, can’t be changed and it’s selected and configured for local cluster ports only.

Last update: 2017-12-11 22:27

(NetApp Confidential - Limited Use) Nabil Fares | 01-05-2018 21:41

Networking

How are the IP addresses selected for MCC-IP fabric?

The customer can decide which blocks to use, it’s recommended the IPs are non-overlapping and planned properly as changing is not trivial and can impact the cluster’s operation.

Last update: 2017-12-11 22:28

(NetApp Confidential - Limited Use) Nabil Fares | 01-05-2018 21:41

Networking

Can the IPs assigned to MCC-IP be part of the RFC 1918 private space?

Yes, there is no restriction on the subnet or whether the IP blocks are routable or private, the only consideration is to ensure the IPs are non-overlapping with existing customer assigned subnets for future expansion if needed.

Last update: 2017-12-11 22:28

(NetApp Confidential - Limited Use) Nabil Fares | 01-05-2018 21:41

Networking

Does MCC-IP support shared infrastructure, using customer’s existing connectivity between sites?

At the initial release (9.3) MCC-IP does not support shared infrastructure or shared ISL links, MCC-IP requires dedicated ISLs just like it’s MCC-FC sibling.

Last update: 2017-12-11 22:29

(NetApp Confidential - Limited Use) Nabil Fares | 01-05-2018 21:41

Networking

Is xWDM 40G required for MCC-IP?

No, the customer can leverage their existing xWDM equipment. If more than one 10G ISL is needed per fabric to support the customer’s writeIO, port-channeling (aka Trunking or Grouping) can be utilized to group several 10G interfaces to achieve the desired speed.

Last update: 2017-12-11 22:29

(NetApp Confidential - Limited Use) Nabil Fares | 01-05-2018 21:41

Networking

Which fabric types and connectivity are supported with MCC-IP?

The initial release (9.3) supports two connectivity options: 1) ISLs without xWDM and 2) ISLs with xWDM. In both cases port-channeling is supported for 10G and 40G ISLs.

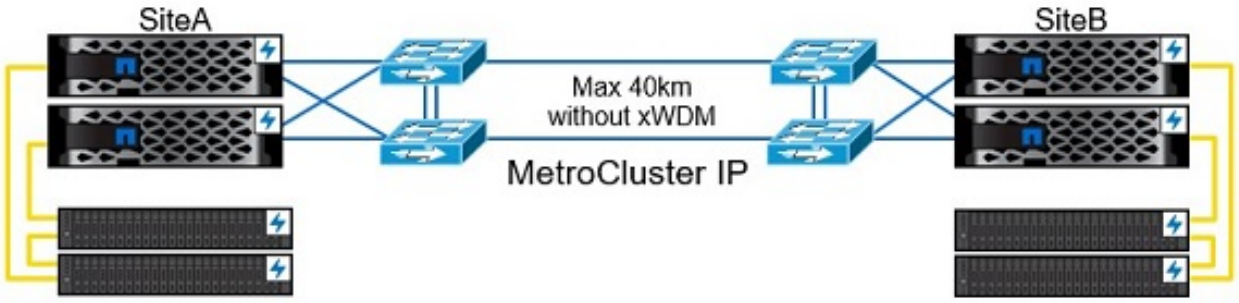

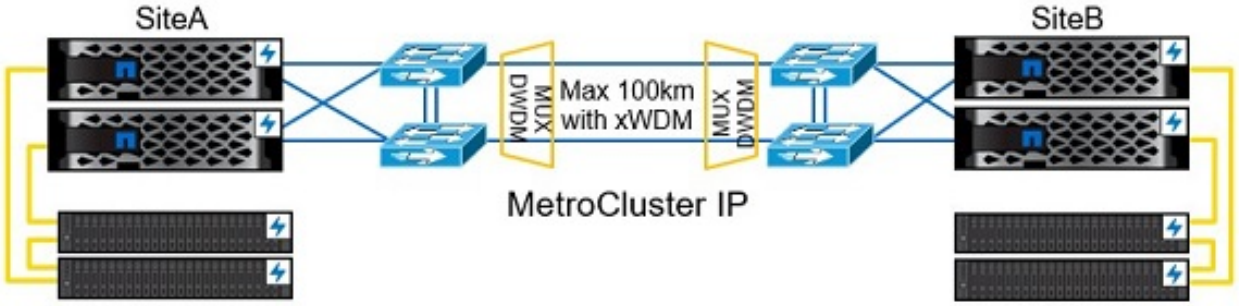

Last update: 2017-12-12 15:39

(NetApp Confidential - Limited Use) Nabil Fares | 01-05-2018 21:41

Networking

What is port-channel?

Port-channeling is the terminology used by Cisco to reference grouping ethernet interfaces using LACP, Link Aggregation Control Protocol an industry standard. Port-channel can be also referred to as Trunking or Grouping, however, Port-channel is the official designation using Cisco’s equipment and documentation.

Last update: 2017-12-12 15:41

(NetApp Confidential - Limited Use) Nabil Fares | 01-05-2018 21:41

Networking

Are VLANs needed?

VLANs are needed to segregate the traffic properly per fabric, deterministic replication per path is critical for proper bandwidth allocation per ISL.

Last update: 2017-12-12 15:42

(NetApp Confidential - Limited Use) Nabil Fares | 01-05-2018 21:41

Networking

Can the ISLs for MCC-IP deployment have different distance and latency?

ISLs in the same fabric should not have different distances and latencies, ISL variances are supported in different fabrics only. All ISLs in Fabric_A must have the same characteristics, while ISLs in Fabric_B must also have the same characteristics but can be different than Fabric_A.

Last update: 2017-12-12 16:14

(NetApp Confidential - Limited Use) Nabil Fares | 01-05-2018 21:41

FAQ Engine

How do I submit a question?

Click on the "Ask Question" and submit your question, an assigned moderator will review and contact your for additional information if necessary.

Last update: 2017-03-29 21:26

(NetApp Confidential - Limited Use) Nabil Fares | 01-05-2018 21:41

FAQ Engine

What is the purpose of the MCC FAQ Engine?

The MCC FAQ Engine is a replacement to the MCC FAQ PDF file, the goal is to provide faster and targeted searches for your specific questions. We maintain a set of commonly asked questions by the field, best practices, and information not typically covered elsewhere.

The MCC FAQ Engine is not intended to replace any existing methods for submitting support tickets or reaching the NetApp internal community, it's sole purpose is providing a rapid way for us to correct existing questions and add new ones.

Last update: 2017-11-03 19:04

(NetApp Confidential - Limited Use) Nabil Fares | 01-05-2018 21:41

FAQ Engine

Do I need an account on the MCC portal if all I want is to browse and submit questions?

No, an account is not needed to browse and submit questions, an account is needed only if you're a content owner, a contributor or an admin.

Last update: 2017-12-18 15:25

(NetApp Confidential - Limited Use) Nabil Fares | 01-05-2018 21:41

FAQ Engine

How do I submit a new question or provide feedback on existing questions?

Submitting a question is simple, click on the "Ask question" button in the menu bar and follow the instructions. An account is not required for this task, an account is only needed for contributors and portal admins.

Providing feedback to an existing question is also simple, use the "Ask question" button and note the question ID. Each question on the system has an ID, it's very important to note the ID for faster response.

This video demonstrates how to use the ask question and feedback options.

https://netapp.hosted.panopto.com/Panopto/Pages/Viewer.aspx?id=2fdb12bd-ad09-4249-ba52-a85d0137a0af

Last update: 2018-01-03 20:44

(NetApp Confidential - Limited Use) Nabil Fares | 01-05-2018 21:41